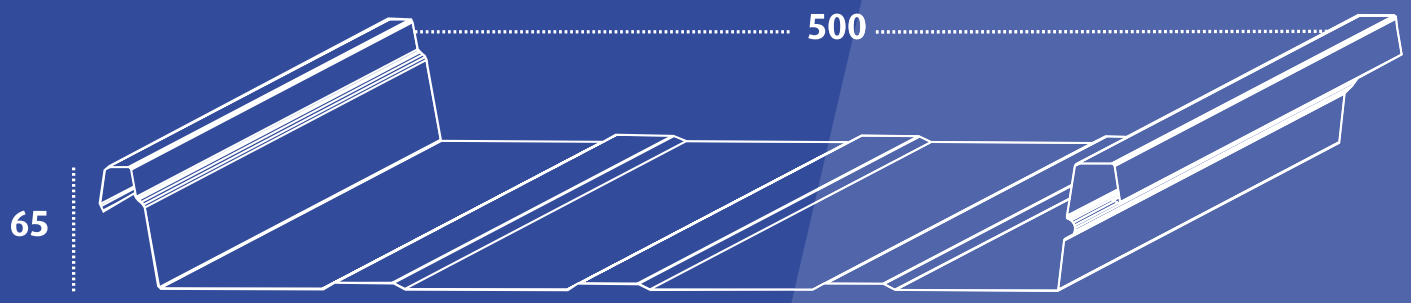

CE MARKING ACCORDING TO THE EUROPEAN TECHNICAL ASSESSMENT

RIB-ROOF Speed 500 Sliding Seam Roofing

Steel (ETA 18-0034)
Aluminium (ETA 18-0035)

zambelli

SIMPLY COVERING FUNCTIONS

MADE IN GERMANY

Deutsches Institut für Bautechnik DIBt

Member of EOTA
www.eota.eu

Approval body for construction products and types of construction

Bautechnisches Prüfamt

An institution established by the Federal and Laender Governments

Designated according to Article 29 of Regulation (EU) No 305/2011 and member of EOTA (European Organisation for Technical Assessment)

European Technical Assessment

ETA-18/0034 of 21 December 2018

English translation prepared by DIBt - Original version in German language

General Part

Technical Assessment Body issuing the European Technical Assessment:	Deutsches Institut für Bautechnik
Trade name of the construction product	RIB-ROOF Speed 500 sliding standing seam roofing steel
Product family to which the construction product belongs	Roof and wall systems with hidden fastenings
Manufacturer	Zambelli RIB-ROOF GmbH & Co. KG Hans-Sachs-Straße 3+ 5 94569 Stephansposching DEUTSCHLAND
Manufacturing plant	A
This European Technical Assessment contains	26 pages including 22 annexes which form an integral part of this assessment
This European Technical Assessment is issued in accordance with Regulation (EU) No 305/2011, on the basis of	EAD 200035-00-0302

The European Technical Assessment is issued by the Technical Assessment Body in its official language. Translations of this European Technical Assessment in other languages shall fully correspond to the original issued document and shall be identified as such.

Communication of this European Technical Assessment, including transmission by electronic means, shall be in full. However, partial reproduction may only be made with the written consent of the issuing Technical Assessment Body. Any partial reproduction shall be identified as such.

This European Technical Assessment may be withdrawn by the issuing Technical Assessment Body, in particular pursuant to information by the Commission in accordance with Article 25(3) of Regulation (EU) No 305/2011.

Specific part

1 Technical description of the product

The "RIB-ROOF Speed 500 sliding standing seam roofing steel" consists of prefabricated wall and roof elements (profiled sheeting) and the appropriate hidden fastenings (standard clip, turned standard clip, directional clips, turned directional clips, directional profiles, turned directional profiles, clip border or perforated clip border). The wall and roof elements are made of galvanized or galvanized and plastic-coated steel strip which is roll formed into profiled sheets in cold condition with a trough-shaped cross section of constant height. The hidden fastenings are made of galvanized steel strip. Alternatively the standard clip and turned standard clip are made of stainless steel strip.

The profiled sheeting is connected with each other continuously forming a rainproof standing seam by crimping the lateral edge ribs of adjacent roof elements. The connection to the substructure is made by the hidden fastenings, not visible from above, crimped between the edge ribs, which are fastened to the substructure.

The components and the system setup of the product are given in Annexes A 1 to A 7.

2 Specification of the intended use in accordance with the applicable European Assessment Document

The verifications and assessment methods on which this European Technical Assessment is based lead to the assumption of a working life of at least 50 years. The indications given on the working life cannot be interpreted as a guarantee given by the producer, but are to be regarded only as a means for choosing the right products in relation to the expected economically reasonable working life of the works.

3 Performance of the product and references to the methods used for its assessment

3.1 Mechanical resistance and stability (BWR 1)

Essential characteristic	Performance
Profiled sheeting (roof and wall elements)	see annexes B 1 to B 6
Accessibility (walk-on stability)	see annex B 10
Standard clip, turned standard clip, directional clips, turned directional clips, directional profiles, turned directional profiles, clip border or perforated clip border (hidden fastenings)	see annexes B 7 to B 9

3.2 Safety in case of fire (BWR 2)

Essential characteristic	Performance
Reaction to fire	class A1
External fire performance of the roof covering	B_{ROOF}(t1), B_{ROOF}(t2), B_{ROOF}(t3), B_{ROOF}(t4) Subject to compliance with any national provisions on the design and execution of works.

3.3 Safety and accessibility in use (BWR 4)

Essential characteristic	Performance
Profiled sheeting (roof and wall elements): - Dead load g - Effective moment of inertia for downward and uplift loads I_{ef}	see annexes B 1 to B 6
Water tightness	No performance assessed
Water permeability	The profiled sheeting is water impermeable.

4 Assessment and verification of constancy of performance (AVCP) system applied, with reference to its legal base

In accordance with EAD No. 200035-00-0302 the applicable European legal act is: Decision 98/214/EC amended by Decision 2001/596/EC.

The system to be applied is: 2+

In addition, with regard to reaction to fire for products outside the scope of Decision 2010/737/EC, 96/603/EC and 2000/605/EC the applicable European legal act is: Decision 98/214/EC

The system to be applied is: 1

5 Technical details necessary for the implementation of the AVCP system, as provided for in the applicable EAD

Technical details necessary for the implementation of the AVCP system are laid down in the control plan deposited with Deutsches Institut für Bautechnik.

Issued in Berlin on 21 December 2018 by Deutsches Institut für Bautechnik

BD Dipl.-Ing. Andreas Kummerow
Head of Department

beglaubigt:
Ortmann

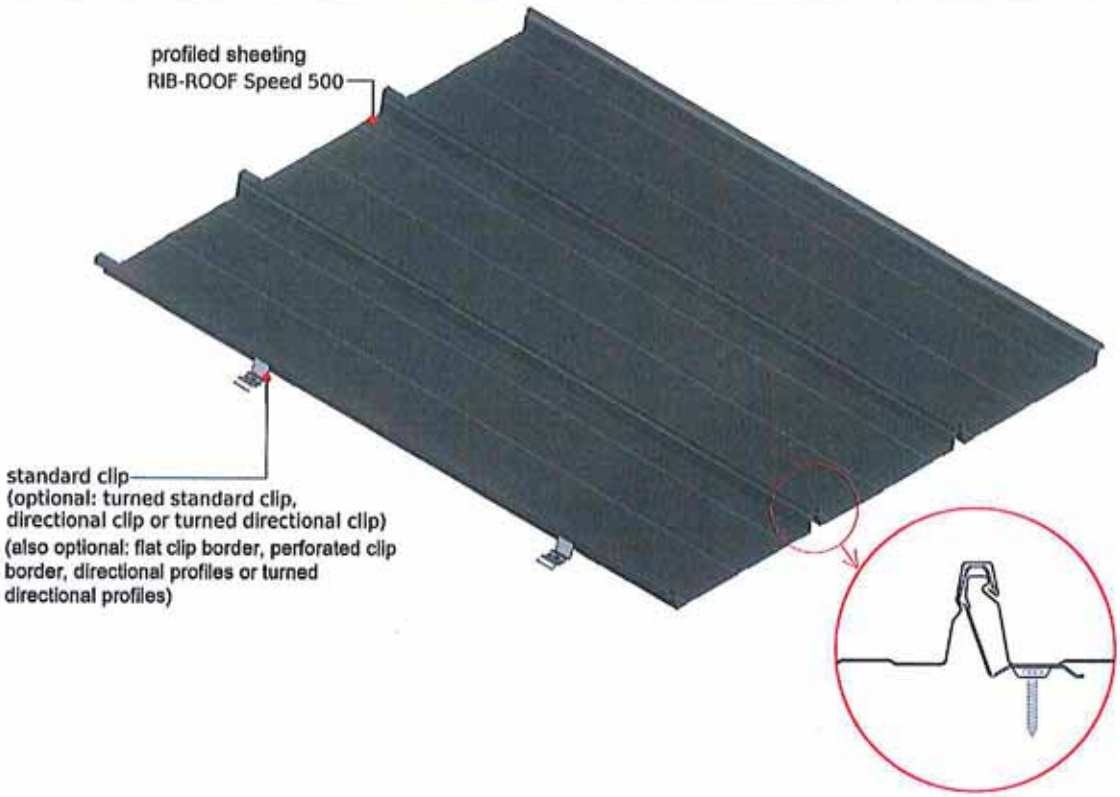

System components

Designation	Material
Profiled sheeting RIB-ROOF Speed 500 sliding seam	As material for the manufacture of the profiled sheeting with the sheet thickness given in the annexes, should meet the mechanical properties of steel grade S320GD or S350GD according to EN 10346:2015-10. For the corrosion protection EN 55634:2010-02 applies. As corrosion protection at least coating mass Z175 or AZ150 according to EN 10346:2015 has to be applied. The Zinc-Magensium-coating mass shall meet the application-oriented demands of EN 55634. The profiled sheeting can be fitted with organic coating (PE, PVDF) as deposited at Deutsches Institut für Bautechnik.
Standard clip, turned standard clip, directional clips, turned directional clips, directional profiles, turned directional profiles, clip border, perforated clip border	Corrosion protected steel sheet, grade S350GD+AZ according to EN 10346:2015-10. For the corrosion protection EN 55634:2010-02 applies. As corrosion protection at least coating mass AZ150 according to EN 10346:2015 has to be applied. The Zinc-Magensium-coating mass shall meet the application-oriented demands of EN 55634.
Standard clip, turned standard clip	Alternatively: Stainless steel, material number 1.4301 according to EN 10088-4; yield strength $R_{p0.2} \geq 290$ N/mm²

RIB-ROOF Speed 500 sliding standing seam roofing steel

System overview

Annex A 1

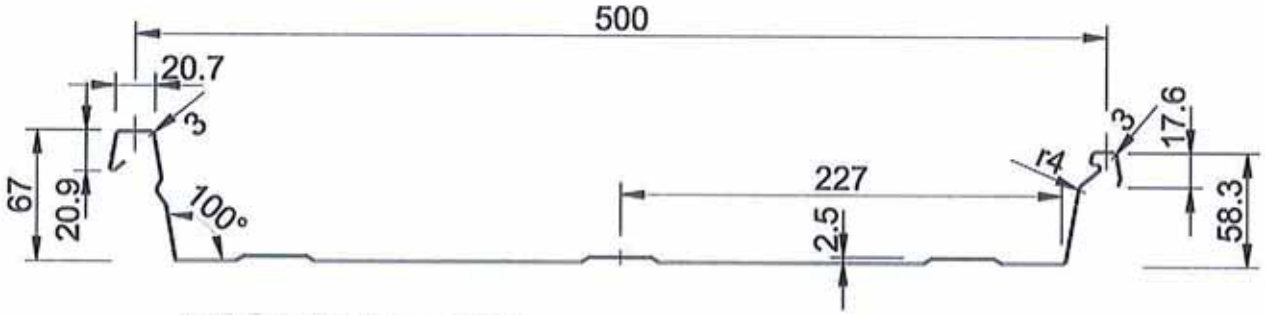

RIB-ROOF Speed 500
cover width = 500 mm

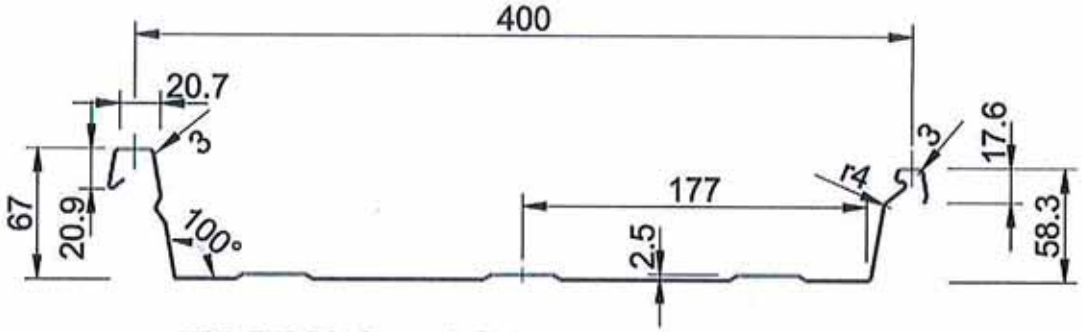

RIB-ROOF Speed 500
cover width = 400 mm

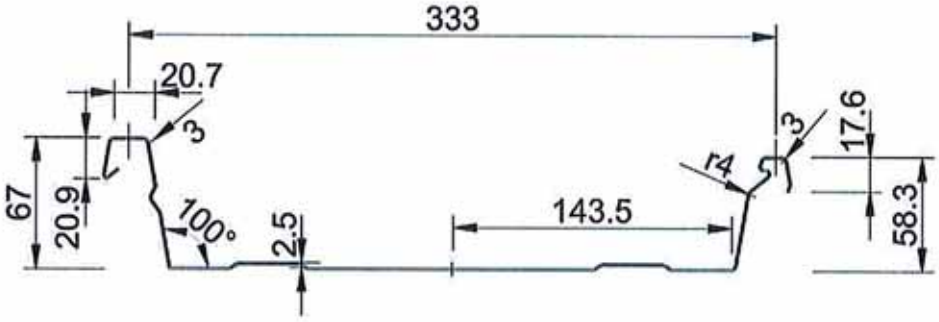

RIB-ROOF Speed 500
cover width = 333 mm

RIB-ROOF Speed 500 sliding standing seam roofing steel	Annex A 2
Profile dimensions	

Fixing clip (standard clip) type RIB-ROOF Speed 500
made of steel sheet t_N = 1,30 mm or
stainless steel t = 1,20 mm

standard clip

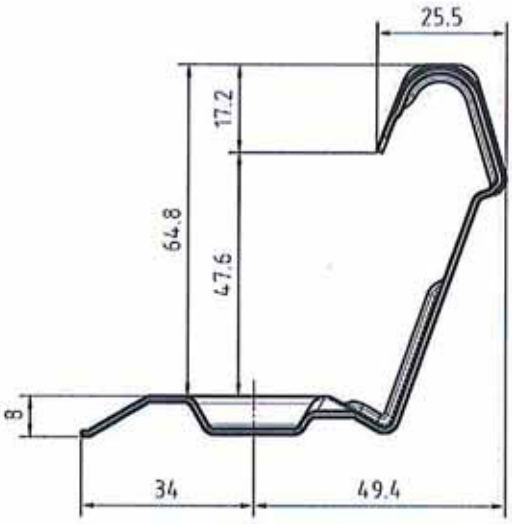

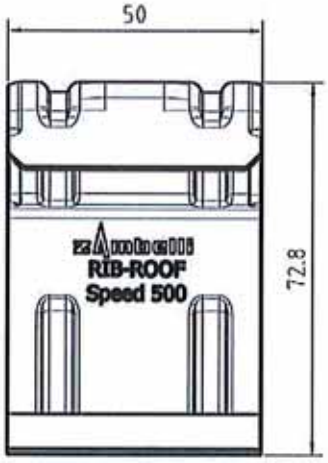

turned standard clip

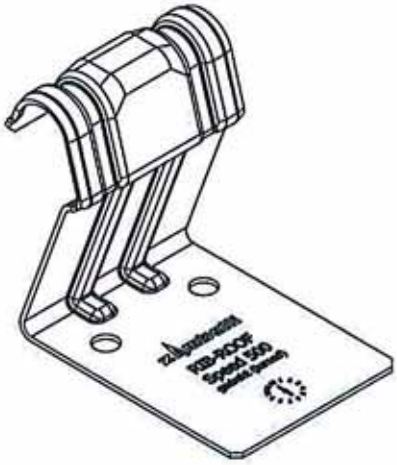

RIB-ROOF Speed 500 sliding standing seam roofing steel	Annex A 3
Fixing clips: standard clip and turned standard clip Form and dimensions	

RIB-ROOF Speed 500 flat clip border

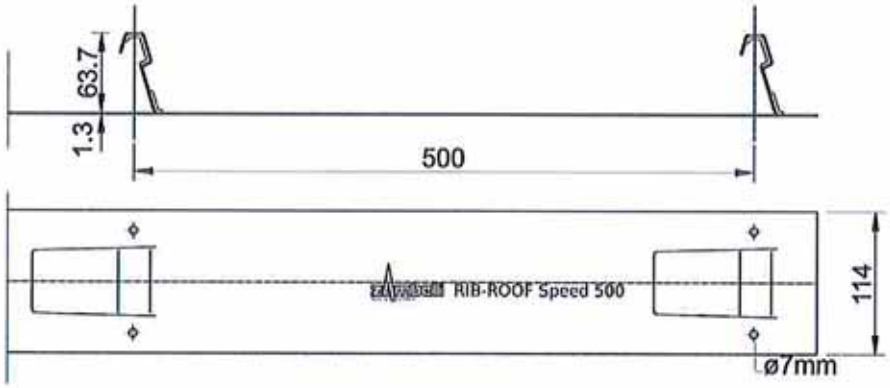

Cross section
flat clip border

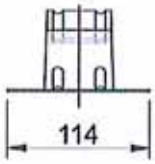

RIB-ROOF Speed 500 perforated clip border

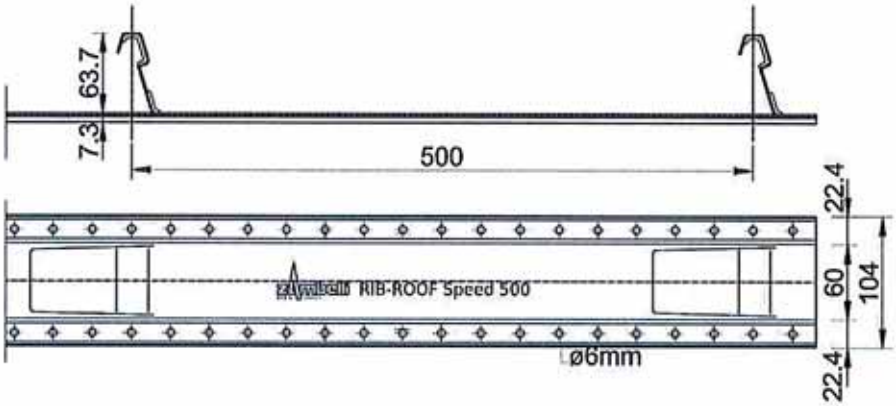

Cross section
perforated clip border

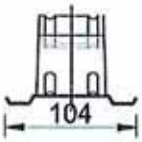

RIB-ROOF Speed 500 sliding standing seam roofing steel	Annex A 4
Flat clip border and perforated clip border	

Directional clip 200

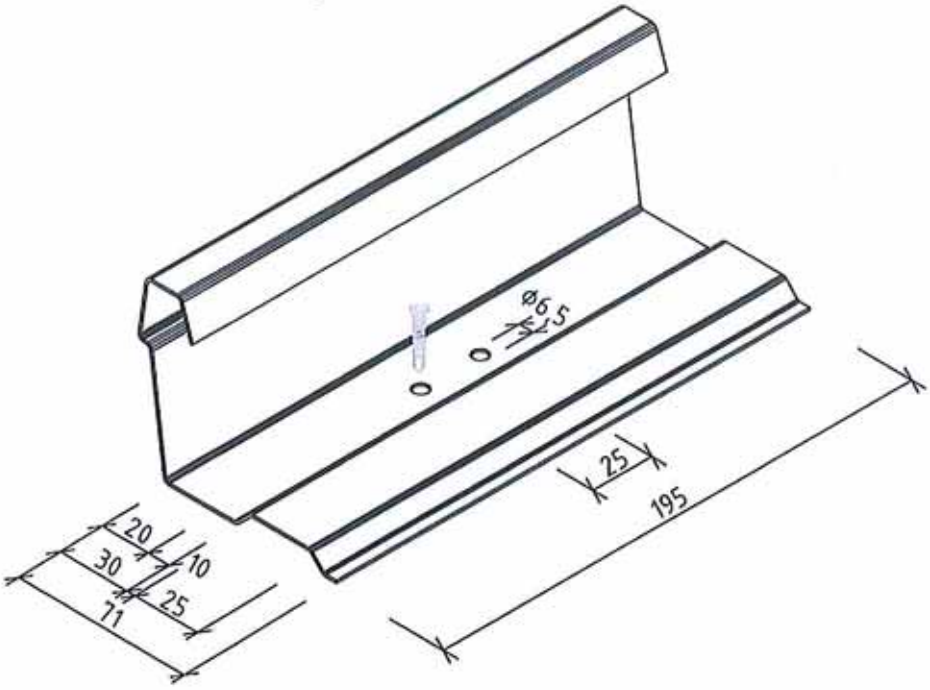

Turned directional clip 200

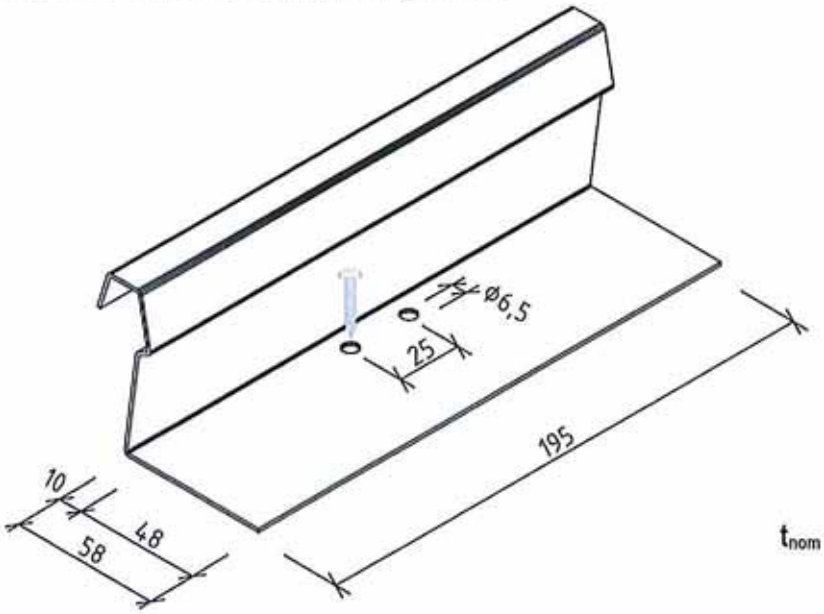

t_{nom} = 1,0 mm

RIB-ROOF Speed 500 sliding standing seam roofing steel	Annex A 5
Directional clip 200, turned directional clip 200, dimensions	

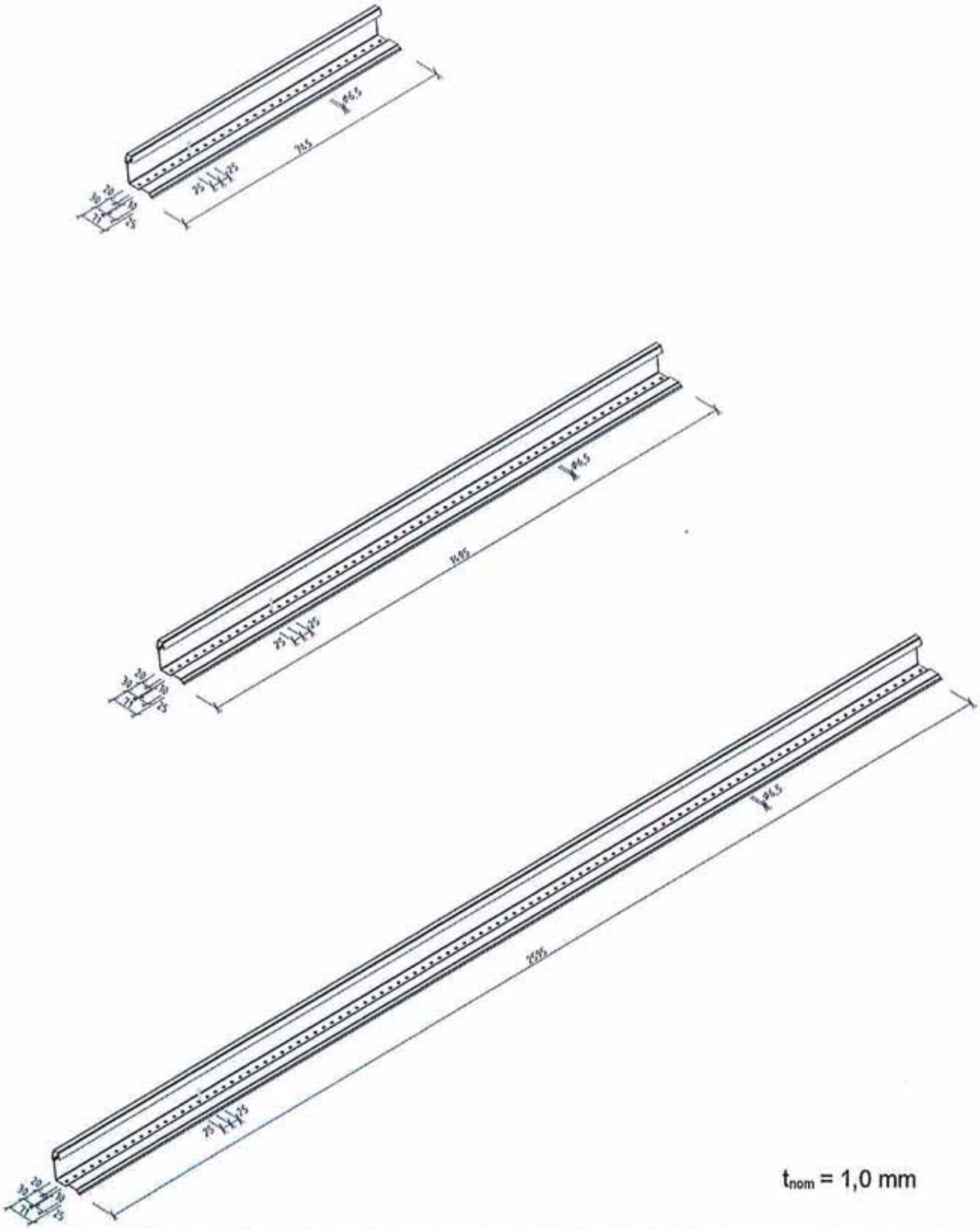

RIB-ROOF Speed 500 sliding standing seam roofing steel	Annex A 6
Directional profiles 750, 1500 and 2600, dimensions	

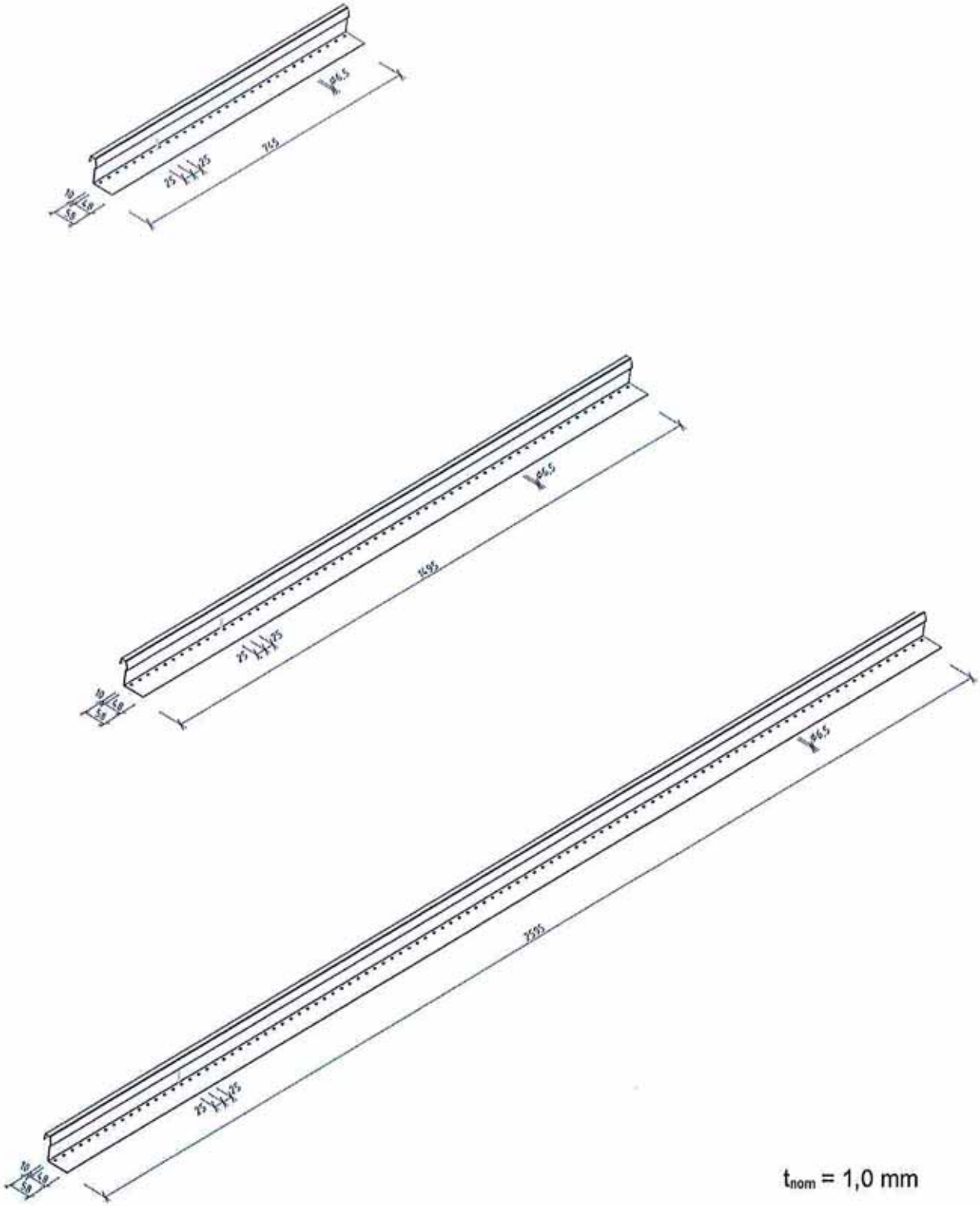

t_{nom} = 1,0 mm

RIB-ROOF Speed 500 sliding standing seam roofing steel	Annex A 7
Turned directional profiles 750, 1500 and 2600, dimensions	

Deutsches Institut für Bautechnik DIBt

Steel S320GD

RIB-ROOF Speed 500

Cover width b = 500 mm

Characteristic resistances for downward load

Sheet thick-ness	Dead load	Moment of inertia	Field moment	End support reaction	Moment and reaction at intermediate supports $M_{Ed}/\left(M^0_{Rk,B}/\gamma_M\right)+F_{Ed}/\left(R^0_{Rk,B}/\gamma_M\right)\leq 1$			
t_N mm	g kN/m²	I_{ef} cm⁴/m	$M_{c,Rk,F}$ kNm/m	$R_{w,Rk,A}$ kN/m	$M^0_{Rk,B}$ kNm/m	$R^0_{Rk,B}$ kN/m	$M_{c,Rk,B}$ kNm/m	$R_{w,Rk,B}$ kN/m
0,63	0,0672	19,4	1,49	2,87	1,45	14,0	1,03	5,74
0,75	0,0800	23,3	1,79	3,45	1,75	16,9	1,24	6,90
		$\gamma_{M,ser}$ *)	γ_M *)					

RIB-ROOF Speed 500

Cover width b = 500 mm

Characteristic resistances for uplift load

Sheet thickness	Field moment	End support reaction	Moment and reaction at intermediate supports $M_{Ed}/\left(M^0_{Rk,B}/\gamma_M\right)+F_{Ed}/\left(R^0_{Rk,B}/\gamma_M\right)\leq 1$			
t_N mm	$M_{c,Rk,F}$ kNm/m	$R_{w,Rk,A}$ kN/m	$M^0_{Rk,B}$ kNm/m	$R^0_{Rk,B}$ kN/m	$M_{c,Rk,B}$ kNm/m	$R_{w,Rk,B}$ kN/m
0,63	1,27	1,58	-	-	0,794	3,15
0,75	1,53	2,19	-	-	1,10	4,38
	γ_M *)					

*) Recommended: $\gamma_{M,ser}$ = 1,0

γ_M = 1,1

RIB-ROOF Speed 500 sliding standing seam roofing steel	Annex B 1
Cross section properties, characteristic resistances and partial safety factor γ_M RIB-ROOF Speed 500, b= 500 mm, steel S320GD	

Steel S320GD

RIB-ROOF Speed 500

Cover width b = 400 mm

Characteristic resistances for downward load

Sheet thick-ness	Dead load	Moment of inertia	Field moment	End support reaction	Moment and reaction at intermediate supports $M_{Ed}/(M^0_{Rk,B}/\gamma_M)+F_{Ed}/(R^0_{Rk,B}/\gamma_M)\leq 1$			
t_N mm	g kN/m²	I_{ef} cm⁴/m	$M_{c,Rk,F}$ kNm/m	$R_{w,Rk,A}$ kN/m	$M^0_{Rk,B}$ kNm/m	$R^0_{Rk,B}$ kN/m	$M_{c,Rk,B}$ kNm/m	$R_{w,Rk,B}$ kN/m
0,63	0,0714	26,3	1,87	3,59	1,81	17,5	1,29	7,17
0,75	0,0851	31,7	2,25	4,32	2,18	21,1	1,55	8,63
		$\gamma_{M,ser}$ *)	γ_M *)					

RIB-ROOF Speed 500

Cover width b = 400 mm

Characteristic resistances for uplift load

Sheet thickness	Field moment	End support reaction	Moment and reaction at intermediate supports $M_{Ed}/(M^0_{Rk,B}/\gamma_M)+F_{Ed}/(R^0_{Rk,B}/\gamma_M)\leq 1$			
t_N mm	$M_{c,Rk,F}$ kNm/m	$R_{w,Rk,A}$ kN/m	$M^0_{Rk,B}$ kNm/m	$R^0_{Rk,B}$ kN/m	$M_{c,Rk,B}$ kNm/m	$R_{w,Rk,B}$ kN/m
0,63	1,66	1,97	-	-	0,992	3,94
0,75	2,00	2,74	-	-	1,39	5,47
	γ_M *)					

*) Recommended: $\gamma_{M,ser}$ = 1,0

γ_M = 1,1

RIB-ROOF Speed 500 sliding standing seam roofing steel	Annex B 2
Cross section properties, characteristic resistances and partial safety factor γ_M RIB-ROOF Speed 500, b= 400 mm, steel S320GD	

Steel S320GD

RIB-ROOF Speed 500
Cover width b = 333 mm
Characteristic resistances for downward load

Sheet thick-ness	Dead load	Moment of inertia	Field moment	End support reaction	Moment and reaction at intermediate supports $M_{Ed}/(M^0_{Rk,B}/\gamma_M)+F_{Ed}/(R^0_{Rk,B}/\gamma_M)\leq 1$			
t_N mm	g kN/m²	I_{ef} cm⁴/m	$M_{c,Rk,F}$ kNm/m	$R_{w,Rk,A}$ kN/m	$M^0_{Rk,B}$ kNm/m	$R^0_{Rk,B}$ kN/m	$M_{c,Rk,B}$ kNm/m	$R_{w,Rk,B}$ kN/m
0,63	0,0757	33,3	2,26	4,31	2,18	21,0	1,54	8,61
0,75	0,0901	40,1	2,72	5,18	2,62	25,3	1,86	10,4
		$\gamma_{M,ser}$ *)	γ_M *)					

RIB-ROOF Speed 500
Cover width b = 333 mm
Characteristic resistances for uplift load

Sheet thickness	Field moment	End support reaction	Moment and reaction at intermediate supports $M_{Ed}/(M^0_{Rk,B}/\gamma_M)+F_{Ed}/(R^0_{Rk,B}/\gamma_M)\leq 1$			
t_N mm	$M_{c,Rk,F}$ kNm/m	$R_{w,Rk,A}$ kN/m	$M^0_{Rk,B}$ kNm/m	$R^0_{Rk,B}$ kN/m	$M_{c,Rk,B}$ kNm/m	$R_{w,Rk,B}$ kN/m
0,63	2,05	2,37	-	-	1,19	4,73
0,75	2,47	3,29	-	-	1,66	6,58
	γ_M *)					

*) Recommended: $\gamma_{M,ser}$ = 1,0
γ_M = 1,1

RIB-ROOF Speed 500 sliding standing seam roofing steel	Annex B 3
Cross section properties, characteristic resistances and partial safety factor γ_M RIB-ROOF Speed 500, b= 333 mm, steel S320GD	

Steel S350GD

RIB-ROOF Speed 500

Cover width b = 500 mm

Characteristic resistances for downward load

Sheet thick-ness	Dead load	Moment of inertia	Field moment	End support reaction	Moment and reaction at intermediate supports $M_{Ed}/\left(M^0_{Rk,B}/\gamma_M\right)+F_{Ed}/\left(R^0_{Rk,B}/\gamma_M\right)\leq 1$			
t_N mm	g kN/m²	I_{ef} cm⁴/m	$M_{c,Rk,F}$ kNm/m	$R_{w,Rk,A}$ kN/m	$M^0_{Rk,B}$ kNm/m	$R^0_{Rk,B}$ kN/m	$M_{c,Rk,B}$ kNm/m	$R_{w,Rk,B}$ kN/m
0,63	0,0672	19,4	1,55	3,00	1,52	14,7	1,08	6,00
0,75	0,0800	23,3	1,87	3,61	1,82	17,7	1,29	7,22
		$\gamma_{M,ser}$ *)	γ_M *)					

RIB-ROOF Speed 500

Cover width b = 500 mm

Characteristic resistances for uplift load

Sheet thickness	Field moment	End support reaction	Moment and reaction at intermediate supports $M_{Ed}/\left(M^0_{Rk,B}/\gamma_M\right)+F_{Ed}/\left(R^0_{Rk,B}/\gamma_M\right)\leq 1$			
t_N mm	$M_{c,Rk,F}$ kNm/m	$R_{w,Rk,A}$ kN/m	$M^0_{Rk,B}$ kNm/m	$R^0_{Rk,B}$ kN/m	$M_{c,Rk,B}$ kNm/m	$R_{w,Rk,B}$ kN/m
0,63	1,32	1,65	-	-	0,830	3,29
0,75	1,59	2,29	-	-	1,157	4,58
	γ_M *)					

*) Recommended: $\gamma_{M,ser} = 1,0$

$\gamma_M = 1,1$

RIB-ROOF Speed 500 sliding standing seam roofing steel	Annex B 4
Cross section properties, characteristic resistances and partial safety factor γ_M RIB-ROOF Speed 500, b= 500 mm, steel S350GD	

Steel S350GD

RIB-ROOF Speed 500
Cover width b = 400 mm
Characteristic resistances for downward load

Sheet thick-ness	Dead load	Moment of inertia	Field moment	End support reaction	Moment and reaction at intermediate supports $M_{Ed}/(M^0_{Rk,B}/\gamma_M)+F_{Ed}/(R^0_{Rk,B}/\gamma_M)\leq 1$			
t_N mm	g kN/m²	I_{ef} cm⁴/m	$M_{c,Rk,F}$ kNm/m	$R_{w,Rk,A}$ kN/m	$M^0_{Rk,B}$ kNm/m	$R^0_{Rk,B}$ kN/m	$M_{c,Rk,B}$ kNm/m	$R_{w,Rk,B}$ kN/m
0,63	0,0714	26,3	1,95	3,75	1,90	18,3	1,34	7,50
0,75	0,0851	31,7	2,35	4,51	2,28	22,1	1,62	9,03
		$\gamma_{M,ser}$ *)	γ_M *)					

RIB-ROOF Speed 500
Cover width b = 400 mm
Characteristic resistances for uplift load

Sheet thickness	Field moment	End support reaction	Moment and reaction at intermediate supports $M_{Ed}/(M^0_{Rk,B}/\gamma_M)+F_{Ed}/(R^0_{Rk,B}/\gamma_M)\leq 1$			
t_N mm	$M_{c,Rk,F}$ kNm/m	$R_{w,Rk,A}$ kN/m	$M^0_{Rk,B}$ kNm/m	$R^0_{Rk,B}$ kN/m	$M_{c,Rk,B}$ kNm/m	$R_{w,Rk,B}$ kN/m
0,63	1,73	2,06	-	-	1,04	4,12
0,75	2,08	2,86	-	-	1,44	5,73
	γ_M *)					

*) Recommended: $\gamma_{M,ser}$ = 1,0
γ_M = 1,1

RIB-ROOF Speed 500 sliding standing seam roofing steel	Annex B 5
Cross section properties, characteristic resistances and partial safety factor γ_M RIB-ROOF Speed 500, b= 400 mm, steel S350GD	

Steel S350GD

RIB-ROOF Speed 500

Cover width b = 333 mm

Characteristic resistances for downward load

Sheet thick-ness	Dead load	Moment of inertia	Field moment	End support reaction	Moment and reaction at intermediate supports $M_{Ed}/(M^0_{Rk,B}/\gamma_M)+F_{Ed}/(R^0_{Rk,B}/\gamma_M)\leq 1$			
t_N mm	g kN/m²	I_{ef} cm⁴/m	$M_{c,Rk,F}$ kNm/m	$R_{w,Rk,A}$ kN/m	$M^0_{Rk,B}$ kNm/m	$R^0_{Rk,B}$ kN/m	$M_{c,Rk,B}$ kNm/m	$R_{w,Rk,B}$ kN/m
0,63	0,0757	33,3	2,36	4,50	2,28	22,0	1,61	9,01
0,75	0,0901	40,1	2,84	5,42	2,74	26,5	1,94	10,8
		$\gamma_{M,ser}$ *)	γ_M *)					

RIB-ROOF Speed 500

Cover width b = 333 mm

Characteristic resistances for uplift load

Sheet thickness	Field moment	End support reaction	Moment and reaction at intermediate supports $M_{Ed}/(M^0_{Rk,B}/\gamma_M)+F_{Ed}/(R^0_{Rk,B}/\gamma_M)\leq 1$			
t_N mm	$M_{c,Rk,F}$ kNm/m	$R_{w,Rk,A}$ kN/m	$M^0_{Rk,B}$ kNm/m	$R^0_{Rk,B}$ kN/m	$M_{c,Rk,B}$ kNm/m	$R_{w,Rk,B}$ kN/m
0,63	2,14	2,47	-	-	1,25	4,95
0,75	2,58	3,44	-	-	1,73	6,88
	γ_M *)					

*) Recommended: $\gamma_{M,ser} = 1,0$

$\gamma_M = 1,1$

RIB-ROOF Speed 500 sliding standing seam roofing steel	Annex B 6
Cross section properties, characteristic resistances and partial safety factor γ_M RIB-ROOF Speed 500, b= 333 mm, steel S350GD	

Characteristic holding forces between profiled sheeting and standard clip, turned standard clip, flat clip border and perforated clip border made of steel t_N = 1,30 mm				
	Per clip	Based on the cover width b for RIB-ROOF Speed 500		
Sheet thickness t_N mm	$F_{Rk,B}$ kN	**b = 500 mm** $F_{Rk,B}$ kN/m	**b = 400 mm** $F_{Rk,B}$ kN/m	**b = 333 mm** $F_{Rk,B}$ kN/m
Intermediate support				
0,63 0,75	1,46 1,77	2,92 3,54	3,65 4,43	4,38 5,31
End support [1)]				
0,63 0,75	0,728 0,887	1,46 1,77	1,82 2,22	2,18 2,66
If the profiled clip borders are fastened at a distance of more than 3 hole spacing apart from the placed holes of the holding bracket (refer to clip border flat), greater deformations and plastification can arise. If this will result in constructional problems, the holding force in used condition has to be limited to the following values for each holding bracket: $F_{A,k}$ = 1,1 kN, $F_{B,k(500\ mm)}$ = 2,2 kN/m $F_{B,k(400\ mm)}$ = 2,75 kN/m $F_{B,k(333\ mm)}$ = 3,3 kN/m				

[1)] Profile overhang ü ≥ 6 cm in excess of the end of the clip.

The indicated holding forces spans are valid for RIB-ROOF Speed 500 out of steel grades S320GD and S350GD.
Recommended partial safety factor: γ_M = 1,33

RIB-ROOF Speed 500 sliding standing seam roofing steel	Annex B 7
Characteristic holding forces between profiled sheeting and standard clip, turned standard clip, flat clip border and perforated clip border, characteristic resistances and partial safety factor γ_M	

Characteristic holding forces between profiled sheeting and standard clip made from stainless steel, t = 1,20 mm, $R_{p0.2} \geq 290$ N/mm²				
	Per clip	Based on the cover width b for RIB-ROOF Speed 500		
Sheet thickness t_N mm	$F_{Rk,B}$ kN	**b = 500 mm** $F_{Rk,B}$ kN/m	**b = 400 mm** $F_{Rk,B}$ kN/m	**b = 333 mm** $F_{Rk,B}$ kN/m
Intermediate support				
0,63	1,06	2,12	2,65	3,18
0,75	1,31	2,62	3,28	3,94
End support [1)]				
0,63	0,529	1,06	1,32	1,59
0,75	0,656	1,31	1,64	1,97

Characteristic holding forces between profiled sheeting and directional clip 200 and turned directional clip 200				
	Per clip	Based on the cover width b for RIB-ROOF Speed 500		
Sheet thickness t_N mm	$F_{Rk,B}$ kN	**b = 500 mm** $F_{Rk,B}$ kN/m	**b = 400 mm** $F_{Rk,B}$ kN/m	**b = 333 mm** $F_{Rk,B}$ kN/m
Intermediate support				
0,63	2,30	4,60	5,75	6,91
0,75	2,30	4,60	5,75	6,91
End support [1)]				
0,63	1,15	2,30	2,88	3,45
0,75	1,15	2,30	2,88	3,45

[1)] Profile overhang ü ≥ 6 cm in excess of the end of the clip.

The indicated holding forces spans are valid for RIB-ROOF Speed 500 out of steel grades S320GD and S350GD.
Recommended partial safety factor: γ_M = 1,33

RIB-ROOF Speed 500 sliding standing seam roofing steel	Annex B 8
Characteristic holding forces between profiled sheeting and standard clip, made from stainless steel, directional clip 200 and turned directional clip characteristic resistances and partial safety factor γ_M	

Characteristic holding forces between profiled sheeting and directional profiles ore turned directional profiles

For directional profiles and turned directional profiles one may assume the load-bearing capacity of a directional clip 200 or turned directional clip 200 according to Annex B 8 for every connecting point of a directional profile (or turned directional profile) with the substructure.
The drawing shows the assignment of the resistance as example for directional profiles and turned directional profiles with two connecting points (supports).

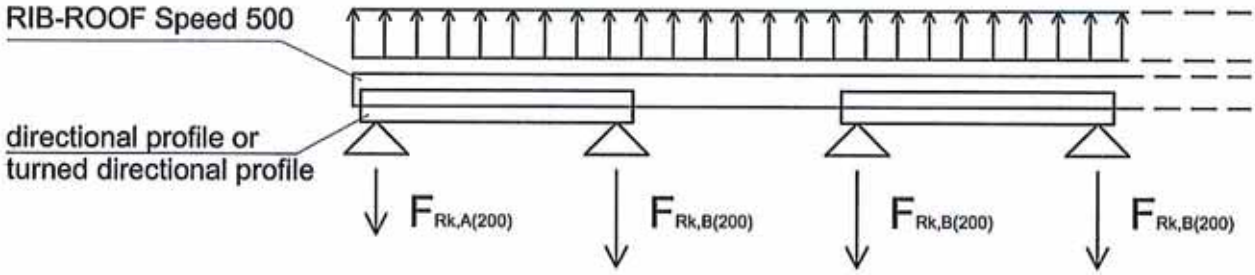

Recommended partial safety factor: $\gamma_M = 1{,}33$

RIB-ROOF Speed 500 sliding standing seam roofing steel	Annex B 9
Characteristic holding forces between profiled sheeting and directional profiles and turned directional profiles	

Walk-on stability after assembly

Fully fixed profiled sheeting may be walked on without any load-dispersal measures up to the following spans:

Sheet thickness	RIB-ROOF Speed 500					
	Cover width = 500 mm		Cover width = 400 mm		Cover width = 333 mm	
	Single-span beam	Multi-span beam	Single-span beam	Multi-span beam	Single-span beam	Multi-span beam
t mm	L_{gr} m	L_{gr} m	L_{gr} m	L_{gr} m	L_{gr} m	L_{gr} m
0,63	3,33	4,16	3,47	4,33	3,60	4,51
0,75	4,00	5,01	4,17	5,21	4,34	5,42

The indicated spans are valid for RIB-ROOF Speed 500 out of steel grades S320GD and S350GD.

Supplementary information for design, installation, execution and maintenance

The performance and serviceability of the construction product can be provided according the following:

C 1 General

The verification of the load-bearing capacity and serviceability is provided in each individual case according to EN 1990 and EN 1993-1-3 in consideration of the information in this ETA.
In general, it is verified that the design value of the effect of the action E_d does not exceed the design values of the related load-bearing capacity R_d e.g., $E_d \leq R_d$.

The design values of the load-bearing capacities are the result of dividing the characteristic values by the partial safety factor γ_M.

Following verifications shall be provided generally:

- Verification of profile sheeting
- Verification of the clips according to Annexes A 3 to A 7
  – Pull out resistance of the clips in head of seam of profiled sheeting (holding forces)
  – Fastening of the clips to the substructure
- If required by national regulations verification of walkability (walk-on resistance) after assembly (where required) according to Annex B 10 or the manufacturer's recommendations

If there is the possibility of the formation of a water pocket (Generally applies to roof slopes less than 2% and to unfavourable position concerning drainage engineering of the roof outlets.), this load case is verified with the following loads: permanent load and water load as a result of the total deflection of the profiled sheeting from the loads to be applied.

The profiled sheeting are supported in a single span configuration or continuously across several spans. The center-to-center distance of the clips is assumed as span. Continuous beams with spans of less than 1.0 m are verified with an effective span of at least 1.0 m.

The loads are static or quasi-static.

The verification of the ultimate limit state is performed by a structural engineer experienced in the field of lightweight metal construction.

As corrosion protection at least coating thickness AZ150 according to EN 10346:2015 has to be applied.

With respect to the corrosion protection the information given in Annex A 1 apply.

RIB-ROOF Speed 500 sliding standing seam roofing steel	Annex C 1
Supplementary information for design, installation, execution and maintenance	

C 2 Design loads (actions)

C 2.1 General

Unless otherwise stated EN 1990 shall apply.

C 2.2 Dead load of profiled sheeting

The dead loads of profiled sheeting according to Annex A 2 are shown in Annexes B 1 to B 6.

C 2.3 Point load, walk-on stability

The verification of the ultimate limit state for a point load action of 1 kN on the profiled sheeting shown in Annex A 2 can be assumed as proofed if the provisions in this European Technical Assessment have been observed.

C 3 Verifications for action of loads acting normal to the installed profiled sheets

C 3.1 Calculation of stress

Unless otherwise stated EN 1993-1-3 shall apply. Fundamentally, the effects of actions acting normal to the installed profiled sheets will be calculated using the theory of elasticity.

C 3.2 Calculation of load bearing capacity on base of characteristic resistance values

EN 1993-1-3 and annexes B 1 to B 9 shall apply.

The verification of the interaction of moment and support reaction of the profiled sheeting at the intermediate support is given in deviation from equation (6.28), clause 6.1.11 of EN 1993-1-3 according to the interaction equation given in Annexes B 1 to B 6. If $M^{\circ}_{Rk,B}$ and $R^{\circ}_{Rk,B}$ are not given in tables of Annexes B 1 to B 6, verification of interaction is not necessary.

The characteristic values of profiled sheets shown in annex A 2 can be interpolated linearly in case of construction widths in between.

In terms of pull-out performance (holding force) between clips and head of seams Annexes B 7 and B 8 applies. The design values are the result of dividing the characteristic values by the partial safety factor γ_M.

For directional profiles and turned directional profiles one may assume the load-bearing capacity of a directional clip 200 or turned directional clip 200 according to Annex B 7 and B 8 for every connecting point of a directional profile (or turned directional profile) with the substructure, see Annex B 9.

The characteristic values of the resistances of connections between clips and substructure can be gathered from the corresponding ETAs or standards (e. g. EN 1995-1-1). The design values are the result of dividing the characteristic values by the partial safety factor γ_M.

C 3.3 Verification of deflections (serviceability limit state)

The characteristic values of moment of inertia of profiled sheeting according to Annex A 2 are shown in Annexes B 1 to B 6.

C 3.4 Forces acting in plane of the roof

A transmission of shear and direct forces acting in the plane of the roof due to a roof pitch by the profiled sheeting must not be considered by way of calculation without special requirements concerning the execution – e.g. formation of fixed points according to Annex C 5. The forces from fixed points shall be further followed up in the substructure.

RIB-ROOF Speed 500 sliding standing seam roofing steel	Annex C 2
Supplementary information for design, installation, execution and maintenance	

C 3.5 Diaphragm action

A diaphragm action of the profiled sheeting for stiffening the total works or a shear or torsional stiffness for stabilizing the substructure against lateral torsional buckling will not be taken into account by way of calculation.

C 4 Information for execution

C 4.1 General

The profiled sheeting is connected with each other continuously forming a rainproof standing seam by clamping the lateral edge ribs of adjacent roof elements. The connection to the substructure is made by clips, not visible from above, clamped between the edge ribs, which are fastened to the substructure.

The profiled sheeting may only be installed by specialists of the manufacturing plant or by companies having received appropriate training and authorization by the manufacturer. The manufacturer or the person laying the profiled sheeting shall prepare implementation instructions for the laying of the elements to be handed over to the assemblers.

Damaged profiled sheeting including plastic deformations must not be installed.

After completion of a roof installation, all foreign objects shall be cleaned from the roof.

When using profiled sheeting of different sheet thicknesses in a roof, these shall be marked according to sheet thicknesses, in order to avoid mix-ups.

C 4.2 Profiled sheeting

Connecting

The profiled sheeting is connected to the substructure at each edge rib by clips. For fixing the profiled sheeting during thermal movement and for transmitting the in plane forces in case of sloped roofs or wall coverings, fixed points are provided according to Annex C 5.

The individual elements are connected immediately after laying by clamping the lateral edge ribs. In doing so, attention shall be paid to a faultless connection to the clips. If the laying of the profiled sheeting is interrupted before completion of the full roof or wall extents, then the last laid profiled sheeting shall always be secured to provide adequate restraint against detachment from the clips due to wind loads.

An additional securing against sheet detachment from the clips is also required if the construction, during installation, is exposed to larger wind loads than at the final state.

Minimal roof slope

When using the profiled sheeting as the weathering outer skin of roofs, the minimum roof pitch for roofs without transverse joints or with welded transverse joints is 1.5° (2.6 %). The required minimum roof pitch increases to 2.9° (5 %) for roofs with sealed transverse joints and/or openings (e.g. domed roof-lights).

The required increase of the minimum roof slope for roof penetrations – e.g. for domed roof lights – may not be required, if completely welded flashings are used and the aluminium flashings are welded with the upper shell of the roof such that a completely watertight joint is achieved.

The requirement of the minimum roof slope does not apply to the ridge area, if the roof elements in the area with pitches ≤ 2.9° (5 %) are arranged continuously over the ridge.

Transverse joints

Transverse joints are permitted only if even under full load complete water run-off is still possible.

Transverse joints may only be installed directly over a support if the joint is at a fixed point. Otherwise the profiled sheeting is overlapped just above a support. For roof pitches of up to 17° (30 %) the mutual overlap of the profiled sheeting amounts to at least 20 cm, for larger roof pitches at least 15 cm.

Walkability (walk-on resistance)

During the installation, profiled sheeting shown in Annex A 2 may only be walked on by placing planks using load-distributing measures.

After completion of the roof the profiled sheeting may be walked on for cleaning and maintenance work without load-distributing measures up to spans according to Annex B 10.

Load-distributing measures, e. g. wooden planks of strength class C24 according to EN 14081-1 with a cross section of 4 x 24 cm and a length of > 3.0 m shall be applied if the effective span exceeds the aforementioned maximum values. The planks may be laid on the ribs in the direction of the span of the profiled sheeting or transverse to the direction of the span.

C 4.3 Clips

For the connection of the profiled sheeting to the substructure clips according to Annexes A 3 to A 7 are used. The clips are attached directly to substructures made of steel, aluminium or timber.

Attachment of the clips to the substructure is carried out with the appropriate screws or rivets according to the ETAs or standards (e. g. EN 1995-1-1).

For connections of the profiled sheeting with a concrete substructure, sufficiently anchored continuous steel parts (e.g. HTU rails or 8 mm thick flat steels) or timber battens (minimum thickness 40 mm) with a width of at least the width of 60 mm are interposed.

C 4.4 End and intermediate support width

A minimum purlin width of 60 mm is required at end and intermediate supports. To ensure the load-bearing capacity at the end supports a profiled sheeting overhang of at least 60 mm is required.

C 4.5 Verge

Exposed edges in the direction of span of the profiled sheeting are stiffened by suitable edge stiffening (verge profile).

C 4.6 Indications to the person installing the profiled sheeting

- Packaging, transport and storage
  The manufacturer's instructions of Zambelli RIB-ROOF relating to Packaging, transport and storage shall be followed. In particular in order to avoid damage to the product a suitable weather protection shall be ensured.
- Use and maintenance
  Each delivery of Zambelli RIB-ROOF Speed 500 sliding standing seam roofing system an installation instruction is enclosed.

  The components of the system must comply with the regulations and must be audited and maintained. After completion of the roof the profiled sheeting may be walked on for cleaning and maintenance work without load-distributing measures up to spans according to Annex B 10. In case of other spans load- distributing measures are necessary (see clause C 4.2).

RIB-ROOF Speed 500 sliding standing seam roofing steel	Annex C 4
Supplementary information for design, installation, execution and maintenance	

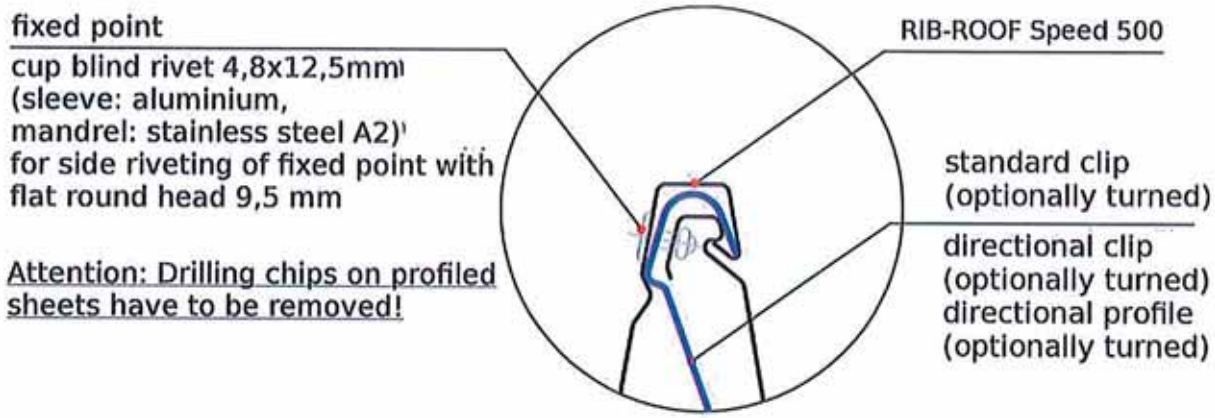

Fixed point

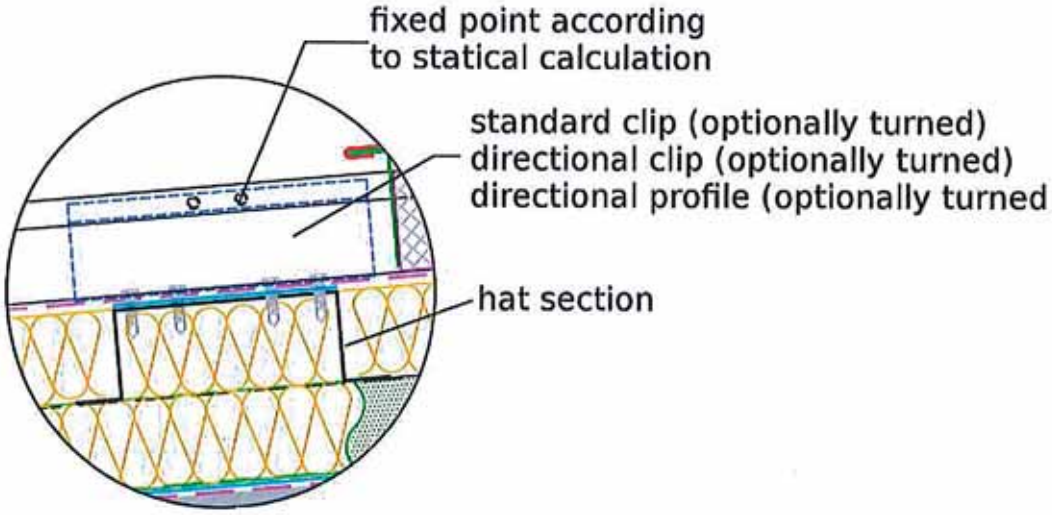

RIB-ROOF Speed 500 sliding standing seam roofing steel	Annex C 5
Supplementary information for design, installation, execution and maintenance Fixed point formation (exemplary for steel substructure)	

Deutsches Institut für Bautechnik DIBt

Member of EOTA
www.eota.eu

Approval body for construction products and types of construction

Bautechnisches Prüfamt

An institution established by the Federal and Laender Governments

Designated according to Article 29 of Regulation (EU) No 305/2011 and member of EOTA (European Organisation for Technical Assessment)

European Technical Assessment

ETA-18/0035 of 21 December 2018

English translation prepared by DIBt - Original version in German language

General Part

Technical Assessment Body issuing the European Technical Assessment:	Deutsches Institut für Bautechnik
Trade name of the construction product	RIB-ROOF Speed 500 sliding standing seam roofing aluminium
Product family to which the construction product belongs	Roof and wall systems with hidden fastenings
Manufacturer	Zambelli RIB-ROOF GmbH & Co. KG Hans-Sachs-Straße 3+ 5 94569 Stephansposching DEUTSCHLAND
Manufacturing plant	A
This European Technical Assessment contains	23 pages including 19 annexes which form an integral part of this assessment
This European Technical Assessment is issued in accordance with Regulation (EU) No 305/2011, on the basis of	EAD 200035-00-0302

The European Technical Assessment is issued by the Technical Assessment Body in its official language. Translations of this European Technical Assessment in other languages shall fully correspond to the original issued document and shall be identified as such.

Communication of this European Technical Assessment, including transmission by electronic means, shall be in full. However, partial reproduction may only be made with the written consent of the issuing Technical Assessment Body. Any partial reproduction shall be identified as such.

This European Technical Assessment may be withdrawn by the issuing Technical Assessment Body, in particular pursuant to information by the Commission in accordance with Article 25(3) of Regulation (EU) No 305/2011.

Specific part

1 Technical description of the product

The "RIB-ROOF Speed 500 sliding standing seam roofing aluminium" consists of prefabricated wall and roof elements (profiled sheeting) and the appropriate hidden spacer kit (directional clips and/or directional profiles or turned directional clips and/or turned directional profiles). The wall and roof elements are made of stucco-embossed, mill finish or plastic-coated aluminium strip which is roll formed into profiled sheets in cold condition with a trough-shaped cross section of constant height. The directional and turned directional clips and profiles are made of galvanized steel strip.

The profiled sheeting is connected with each other continuously forming a rainproof standing seam by crimping the lateral edge ribs of adjacent roof elements. The connection to the substructure is made by directional clips and/or directional profiles or turned directional clips and/or turned directional profiles, not visible from above, crimped between the edge ribs, which are fastened to the substructure.

The components and the system setup of the product are given in annexes A1 to A6.

2 Specification of the intended use in accordance with the applicable European assessment Document

The verifications and assessment methods on which this European Technical Assessment is based lead to the assumption of a working life of the kit of at least 50 years. The indications given on the working life cannot be interpreted as a guarantee given by the producer, but are to be regarded only as a means for choosing the right products in relation to the expected economically reasonable working life of the works.

3 Performance of the product and references to the methods used for its assessment

3.1 Mechanical resistance and stability (BWR 1)

Essential characteristic	Performance
Profiled sheeting	see annexes B 1 to B 3
Directional clips, turned directional clips, directional profiles and turned directional profiles (hidden fastenings)	see annexes B 4 to B 5
Walk-on stability	see annex B 6

3.2 Safety in case of fire (BWR 2)

Essential characteristic	Performance
Reaction to fire	class A1
External fire performance of the roof covering	B_{ROOF}(t1), B_{ROOF}(t2), B_{ROOF}(t3), B_{ROOF}(t4) Subject to compliance with any national provisions on the design and execution of works.

3.3 Safety and accessibility in use (BWR 4)

Essential characteristic	Performance
Profiled sheeting: - Dead load g - Effective moment of inertia for uplift and for downward load I_{ef}	see annexes B 1 to B 3
Water tightness	No performance assessed
Water permeability	The profiled sheeting is water impermeable.

4 Assessment and verification of constancy of performance (AVCP) system applied, with reference to its legal base

In accordance with EAD No. 200035-00-0302 the applicable European legal act is: Decision 1998/214/EC, amended by 2001/596/EC.

The system to be applied is: 2+

In addition, with regard to reaction to fire for products outside the scope of Decision 2010/737/EC, 96/603/EC and 2000/605/EC the applicable European legal act is: Decision 1998/214/EC

The system to be applied is: 1

5 Technical details necessary for the implementation of the AVCP system, as provided for in the applicable EAD

Technical details necessary for the implementation of the AVCP system are laid down in the control plan deposited with Deutsches Institut für Bautechnik.

Issued in Berlin on 21 December 2018 by Deutsches Institut für Bautechnik

BD Dipl.-Ing. Andreas Kummerow
Head of Department

beglaubigt:
Ortmann

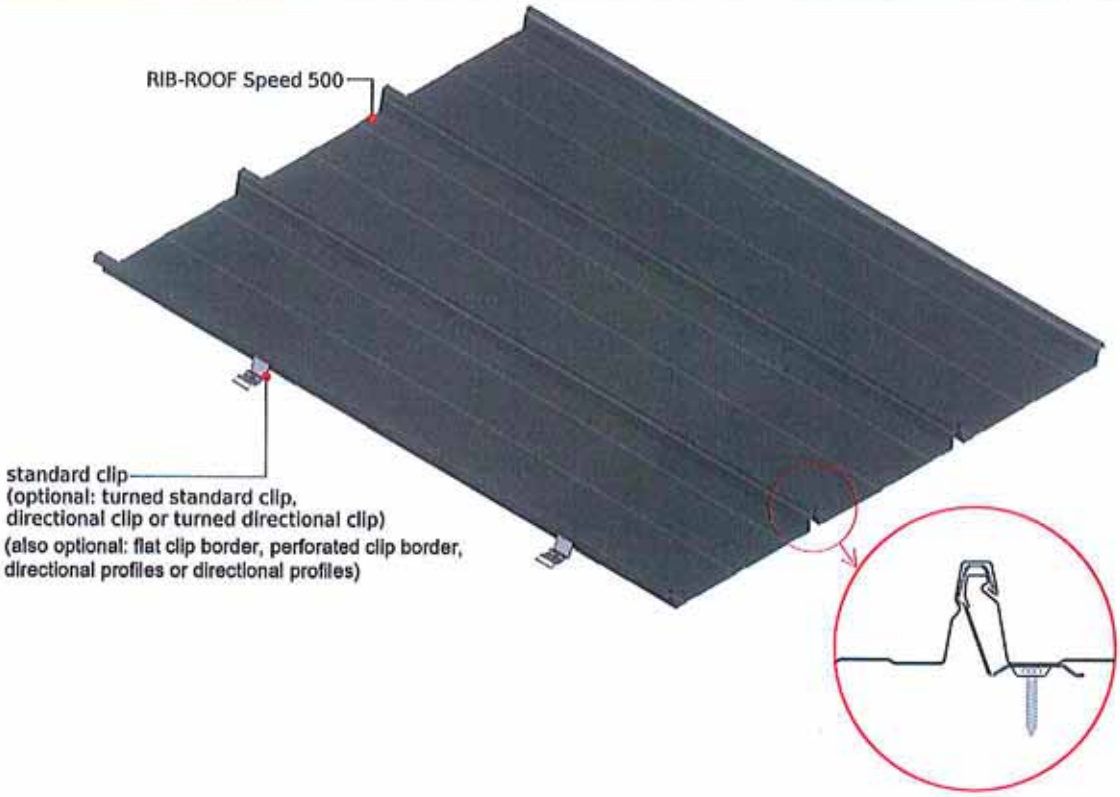

System components

Designation	Material
Profiled sheeting RIB-ROOF Speed 500 sliding seam	As material for the manufacture of the profiled sheeting with the sheet thickness given in the annexes, the aluminium alloys EN AW-3004, EN AW-3005 or EN AW-3105 are used. The initial aluminium strip material not yet roll formed (mill finish, stucco-embossed or organic coated) has at least the following mechanical properties in the longitudinal direction for all sheet thicknesses (resistances and elongation at break determined in accordance with EN 10002-1):

Alloy	$R_{p0,2}$ N/mm²	R_m N/mm²	$A_{50\,mm}$ %
EN AW-3004, strength type 1	220	250	4
EN AW-3004, strength type 2	190	215	3
EN AW-3005, EN AW-3105	190	215	3

The profiled sheeting can be fitted with organic coating (PE, PVDF) as deposited at Deutsches Institut für Bautechnik.

Standard clip, turned standard clip, directional clips, turned directional clips, directional profiles, turned directional profiles, clip border, perforated clip border	Corrosion protected steel sheet, grade S350GD+AZ or S350GD+ZM according to EN 10346:2015-10. For the corrosion protection EN 55634:2010-02 applies. As corrosion protection at least coating mass AZ150 according to EN 10346:2015 has to be applied. The Zinc-Magensium-coating mass shall meet the application-oriented demands of EN 55634.
Standard clip, turned standard clip	Alternatively: Stainless steel, material number 1.4301 according to EN 10088-4; yield strength $R_{p0,2} \geq 290$ N/mm²

RIB-ROOF Speed 500 sliding standing seam roofing aluminium

System overview

Annex A 1

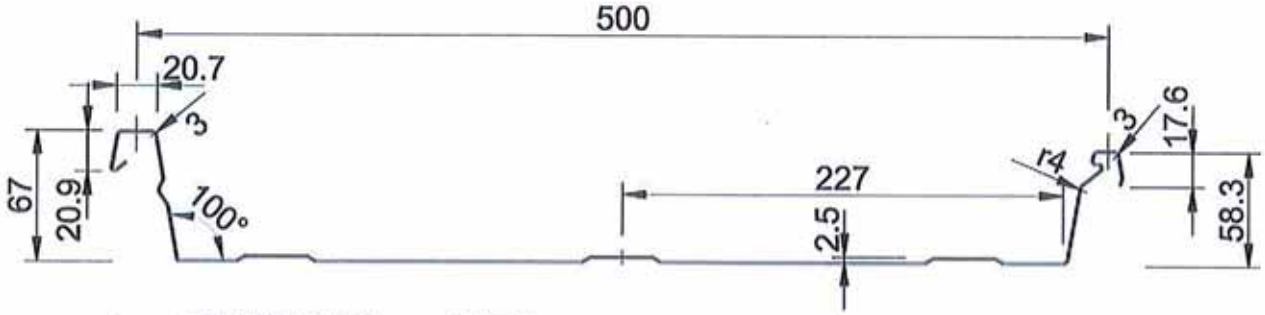

RIB-ROOF Speed 500
cover width = 500 mm

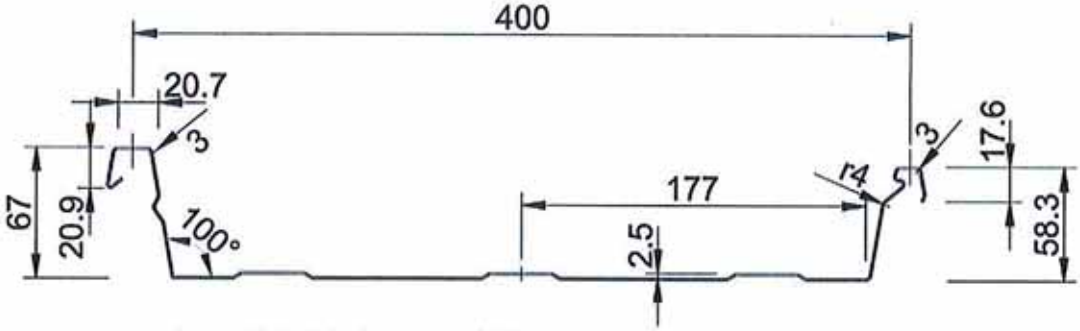

RIB-ROOF Speed 500
cover width = 400 mm

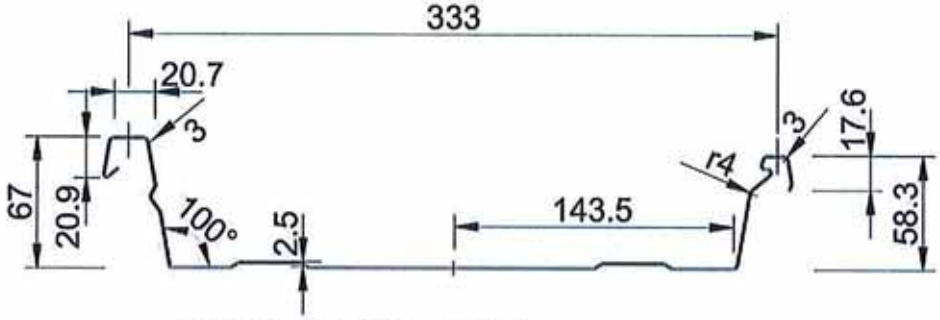

RIB-ROOF Speed 500
cover width = 333 mm

RIB-ROOF Speed 500 sliding standing seam roofing aluminium	Annex A 2
Profile dimensions	

Deutsches Institut für Bautechnik DIBt

Fixing clip (standard clip) type RIB-ROOF Speed 500
made of steeel sheet t_N = 1,30 mm or
stainless steel t = 1,20 mm

standard clip

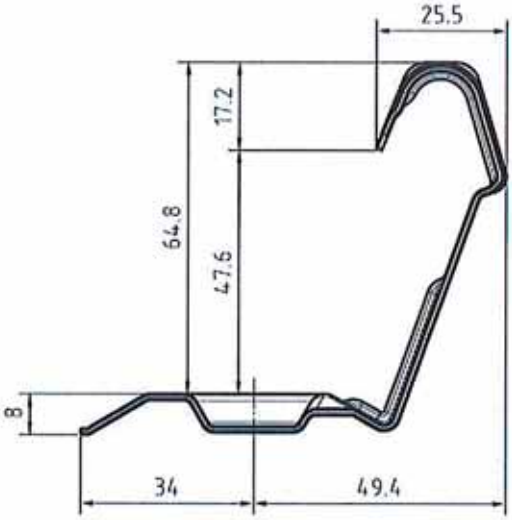

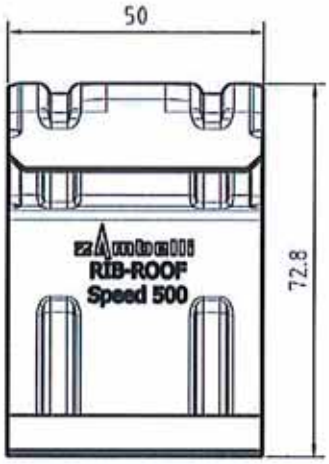

turned standard clip

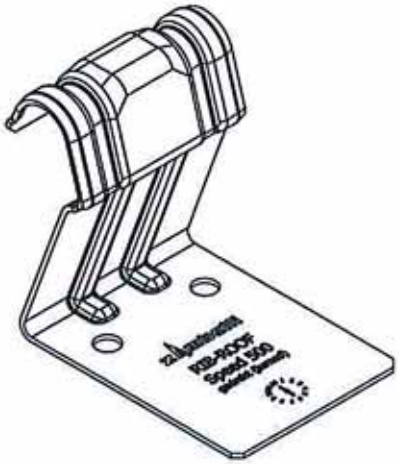

RIB-ROOF Speed 500 sliding standing seam roofing aluminium	Annex A 3
Fixing clips: standard clip and turned standard clip Form and Dimensions	

RIB-ROOF Speed 500 flat clip border

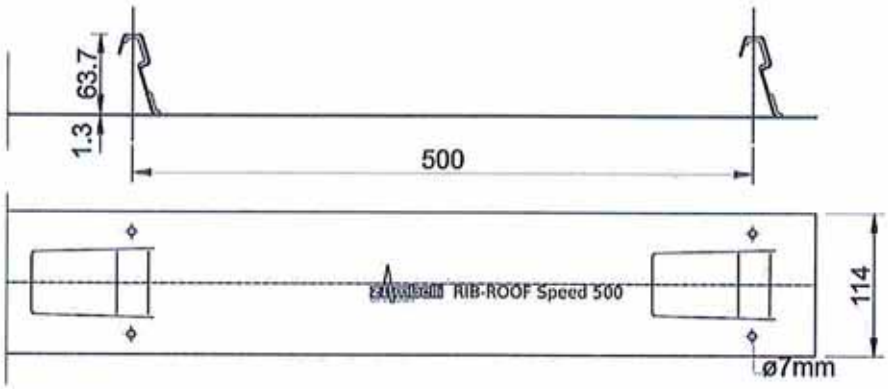

Cross section
flat clip border

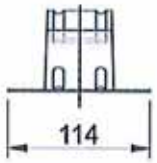

RIB-ROOF Speed 500 perforated clip border

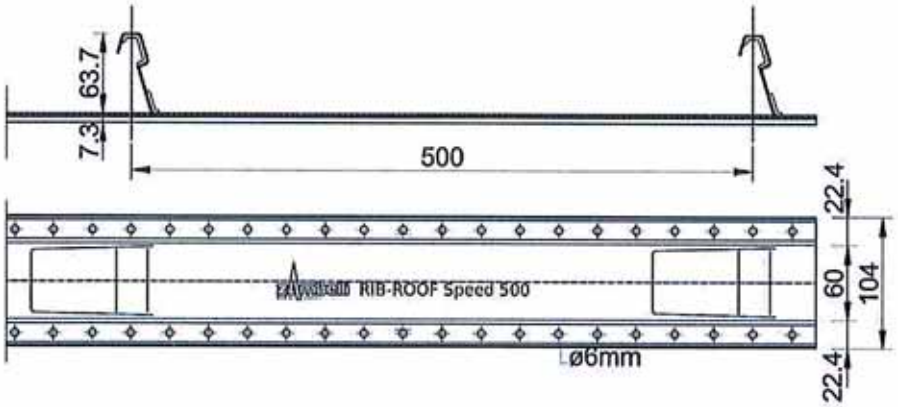

Cross section
perforated clip border

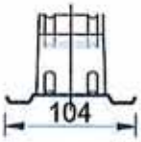

RIB-ROOF Speed 500 sliding standing seam roofing aluminium	Annex A 4
Flat clip border and perforated clip border	

Directional clip 200

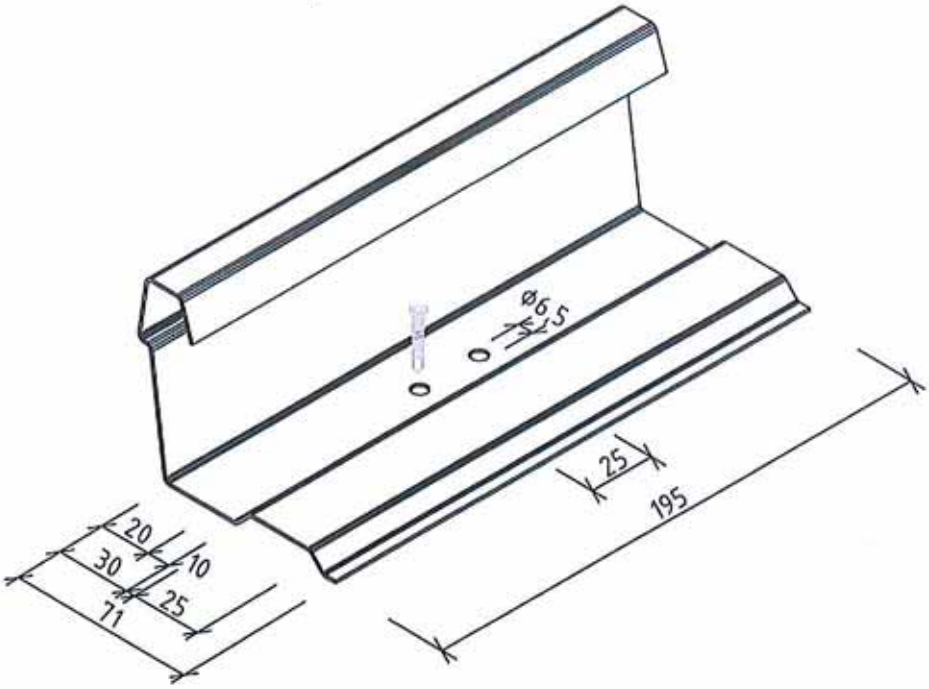

Turned directional clip 200

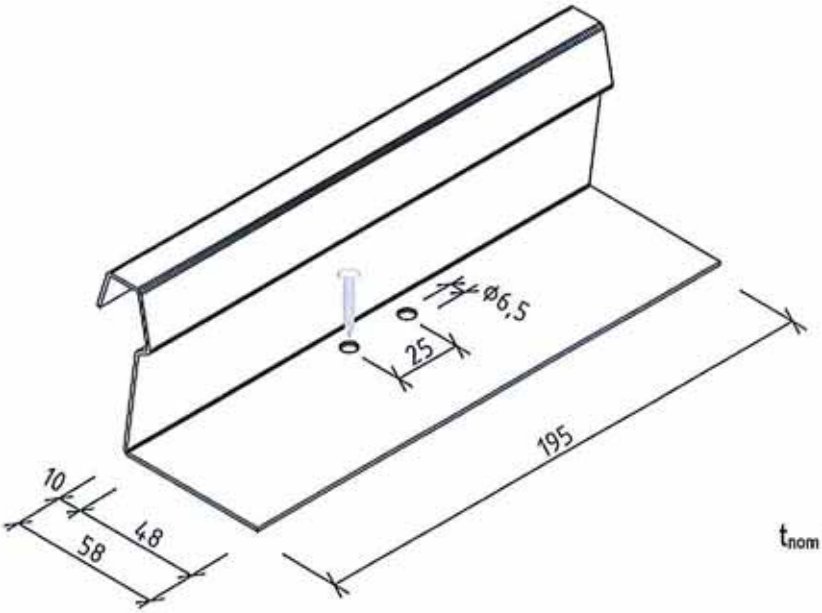

t_{nom} = 1,0 mm

RIB-ROOF Speed 500 sliding standing seam roofing aluminium	Annex A 5
Directional clip 200, turned directional clip 200, dimensions	

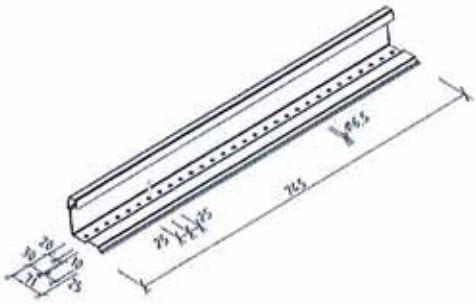

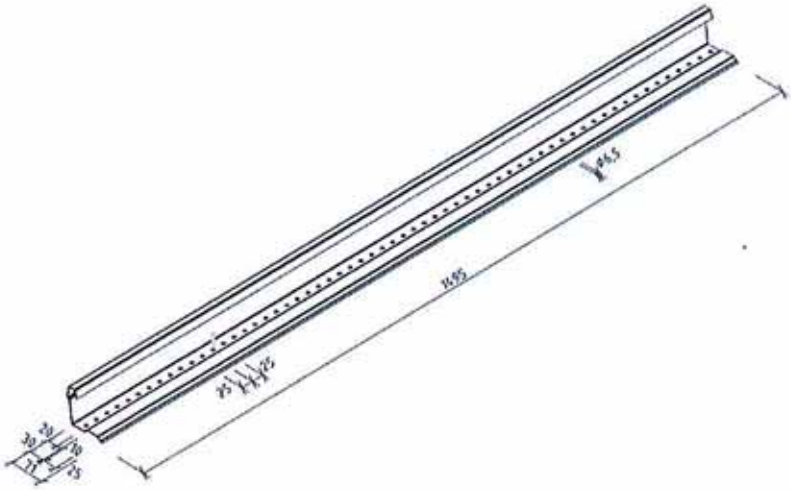

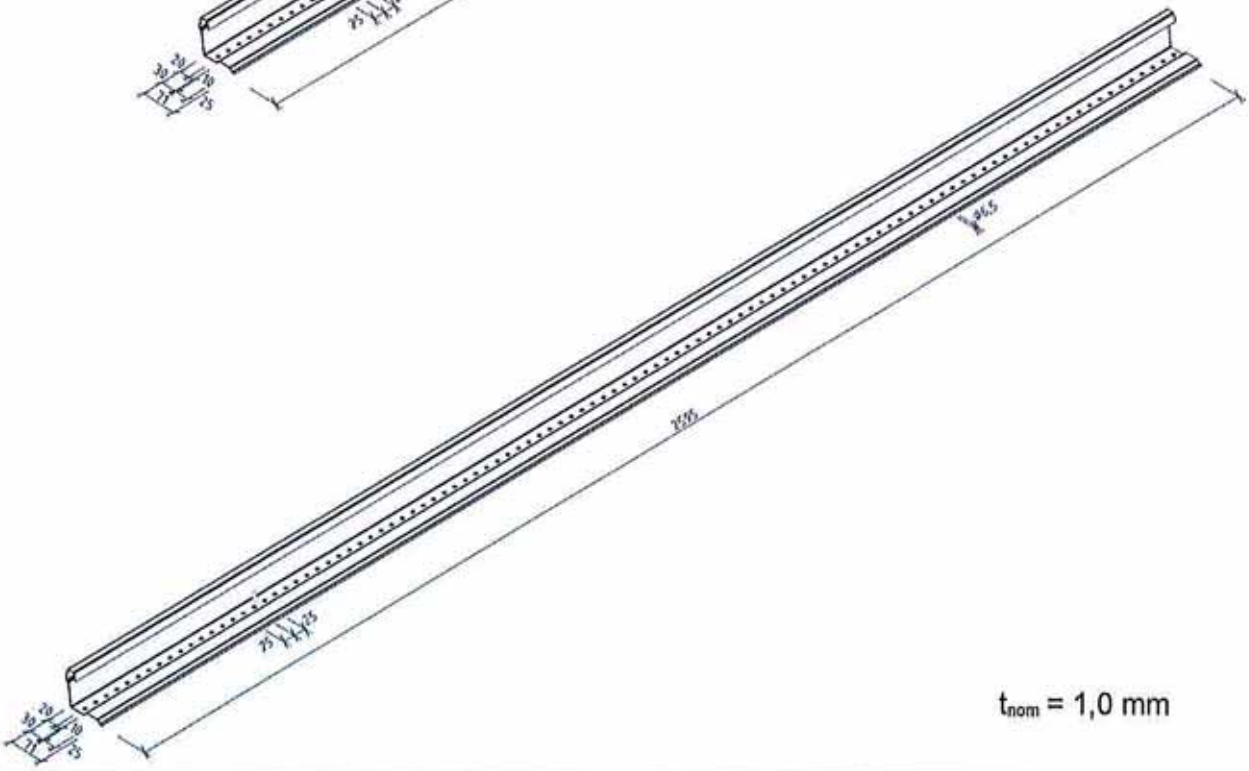

t_{nom} = 1,0 mm

RIB-ROOF Speed 500 sliding standing seam roofing aluminium	Annex A 6
Directional profiles 750, 1500 and 2600, dimensions	

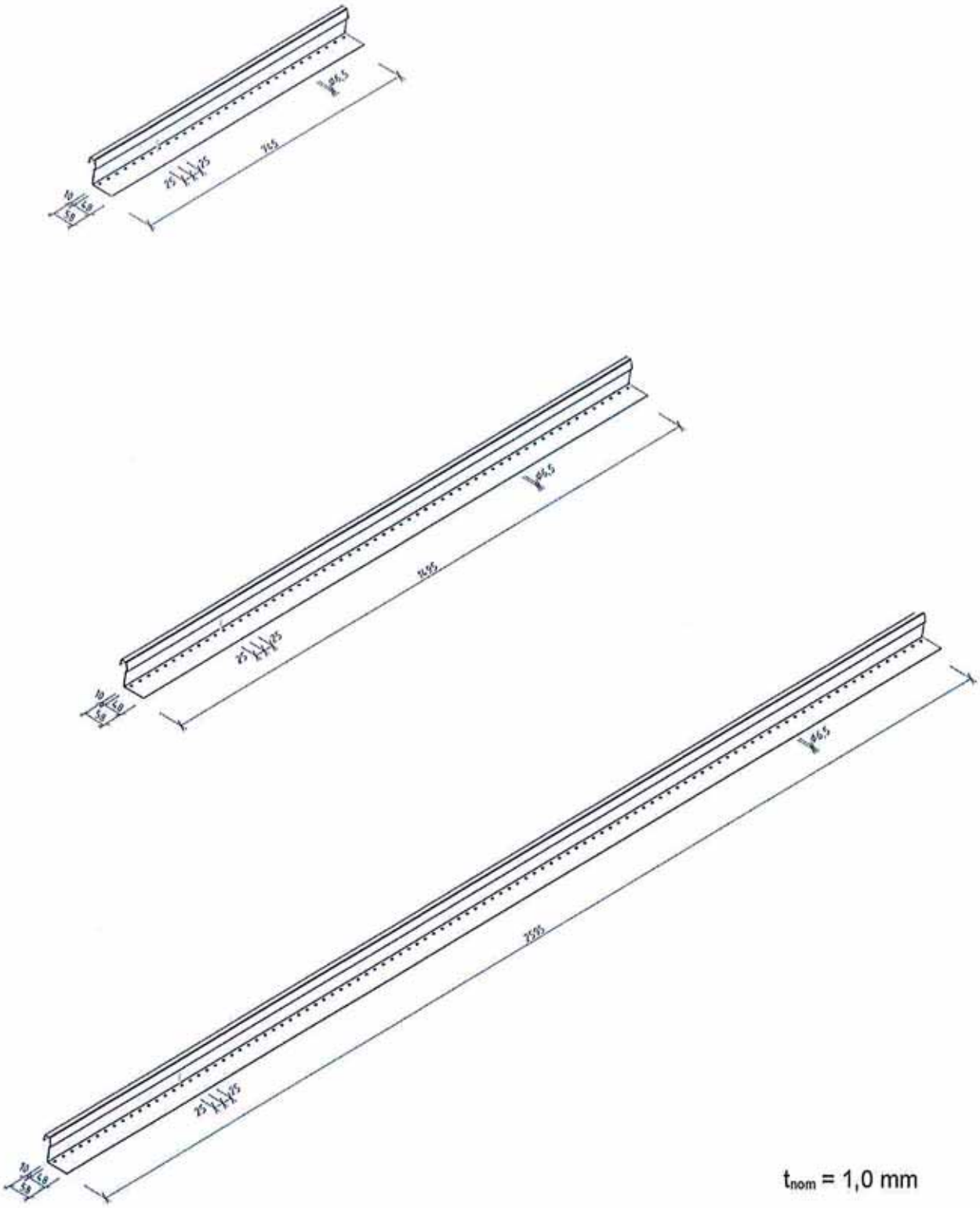

RIB-ROOF Speed 500 sliding standing seam roofing aluminium	Annex A 7
Turned directional profiles 750, 1500 and 2600, dimensions	

RIB-ROOF Speed 500
Cover width b= 500 mm

Characteristic values for downward load

Sheet thick-ness	Dead load	Moment of inertia	Field moment	End support reaction	Moment and reaction at intermediate supports $M_{Ed}/\left(M^0_{Rk,B}/\gamma_M\right)+F_{Ed}/\left(R^0_{Rk,B}/\gamma_M\right)\leq 1$			
t mm	g kN/m²	I_{ef} cm⁴/m	$M_{c,Rk,F}$ kNm/m	$R_{w,RK,A}$ kN/m	$M^0_{Rk,B}$ kNm/m	$R^0_{Rk,B}$ kN/m	$M_{c,Rk,B}$ kNm/m	$R_{w,Rk,B}$ kN/m
0,7	0,0252	24,8	0,822	1,88	0,930	9,55	0,670	3,77
0,8	0,0288	32,4	1,07	2,46	1.22	12,5	0,875	4,92
0,9	0,0323	33,4	1,42	3,15	1,47	17,8	1,10	6,29
1,0	0,0360	34,5	1,76	3,83	1,72	23,2	1,33	7,67
		$\gamma_{M,ser}$ *)	γ_M *)					

RIB-ROOF Speed 500
Cover width b= 500 mm

Characteristic values for uplift load

Sheet thickness	Field moment	End support reaction	Moment and reaction at intermediate supports $M_{Ed}/\left(M^0_{Rk,B}/\gamma_M\right)+F_{Ed}/\left(R^0_{Rk,B}/\gamma_M\right)\leq 1$			
t mm	$M_{c,Rk,F}$ kNm/m	$R_{w,RK,A}$ kN/m	$M^0_{Rk,B}$ kNm/m	$R^0_{Rk,B}$ kN/m	$M_{c,Rk,B}$ kNm/m	$R_{w,Rk,B}$ kN/m
0,7	0,754	1,35	-	-	0,677	2,70
0,8	0,985	1,76	-	-	0,885	3,53
0,9	1,21	1,88	-	-	0,941	3,75
1,0	1,43	1,99	-	-	0,997	3,97
	γ_M *)					

*) Recommended: $\gamma_{M,ser}$ = 1,0

γ_M = 1,1

RIB-ROOF Speed 500 sliding standing seam roofing aluminium	Annex B 1
Cross section properties, characteristic resistance values and partial safety factor γ_M RIB-ROOF Speed 500, b= 500	

RIB-ROOF Speed 500
Cover width b= 400 mm

Characteristic values for downward load

Sheet thick-ness	Dead load	Moment of inertia	Field moment	End support reaction	Moment and reaction at intermediate supports $M_{Ed}/(M^0_{Rk,B}/\gamma_M)+F_{Ed}/(R^0_{Rk,B}/\gamma_M)\leq 1$			
t	g	I_{ef}	$M_{c,Rk,F}$	$R_{w,RK,A}$	$M^0_{Rk,B}$	$R^0_{Rk,B}$	$M_{c,Rk,B}$	$R_{w,Rk,B}$
mm	kN/m²	cm⁴/m	kNm/m	kN/m	kNm/m	kN/m	kNm/m	kN/m
0,7	0,0268	33,9	1,10	2,35	1,16	11,9	0,837	4,71
0,8	0,0306	44,3	1,44	3,07	1,52	15,6	1,09	6,15
0,9	0,0344	46,5	1,80	3,93	1,83	22,3	1,38	7,87
1,0	0,0383	48,6	2,16	4,79	2,15	29,0	1,66	9,59
		$\gamma_{M,ser}$ *)	γ_M *)					

RIB-ROOF Speed 500
Cover width b= 400 mm

Characteristic values for uplift load

Sheet thickness	Field moment	End support reaction	Moment and reaction at intermediate supports $M_{Ed}/(M^0_{Rk,B}/\gamma_M)+F_{Ed}/(R^0_{Rk,B}/\gamma_M)\leq 1$			
t	$M_{c,Rk,F}$	$R_{w,RK,A}$	$M^0_{Rk,B}$	$R^0_{Rk,B}$	$M_{c,Rk,B}$	$R_{w,Rk,B}$
mm	kNm/m	kN/m	kNm/m	kN/m	kNm/m	kN/m
0,7	0,973	1,69	-	-	0,847	3,38
0,8	1,27	2,21	-	-	1,11	4,41
0,9	1,54	2,34	-	-	1,18	4,69
1,0	1,80	2,48	-	-	1,25	4,97
	γ_M *)					

*) Recommended: $\gamma_{M,ser}$ = 1,0
γ_M = 1,1

RIB-ROOF Speed 500 sliding standing seam roofing aluminium	Annex B 2
Cross section properties, characteristic resistance values and partial safety factor γ_M RIB-ROOF Speed 500, b= 400	

RIB-ROOF Speed 500
Cover width b= 333 mm

Characteristic values for downward load

Sheet thick-ness	Dead load	Moment of inertia	Field moment	End support reaction	Moment and reaction at intermediate supports $M_{Ed}/\left(M^0_{Rk,B}/\gamma_M\right)+F_{Ed}/\left(R^0_{Rk,B}/\gamma_M\right)\leq 1$			
t mm	g kN/m²	I_{ef} cm⁴/m	$M_{c,Rk,F}$ kNm/m	$R_{w,RK,A}$ kN/m	$M^0_{Rk,B}$ kNm/m	$R^0_{Rk,B}$ kN/m	$M_{c,Rk,B}$ kNm/m	$R_{w,Rk,B}$ kN/m
0,7	0,0284	43,1	1,38	2,83	1,40	14,3	1,01	5,65
0,8	0,0324	56,3	1,80	3,69	1,82	18,7	1,31	7,38
0,9	0,0365	59,6	2,18	4,72	2,20	26,8	1,65	9,45
1,0	0,0405	62,8	2,56	5,76	2,58	34,8	1,99	11,5
		$\gamma_{M,ser}$ *)	γ_M *)					

RIB-ROOF Speed 500
Cover width b= 333 mm

Characteristic values for uplift load

Sheet thickness	Field moment	End support reaction	Moment and reaction at intermediate supports $M_{Ed}/\left(M^0_{Rk,B}/\gamma_M\right)+F_{Ed}/\left(R^0_{Rk,B}/\gamma_M\right)\leq 1$			
t mm	$M_{c,Rk,F}$ kNm/m	$R_{w,RK,A}$ kN/m	$M^0_{Rk,B}$ kNm/m	$R^0_{Rk,B}$ kN/m	$M_{c,Rk,B}$ kNm/m	$R_{w,Rk,B}$ kN/m
0,7	1,19	2,03	-	-	1,02	4,06
0,8	1,56	2,65	-	-	1,33	5,30
0,9	1,87	2,82	-	-	1,41	5,63
1,0	2,17	2,98	-	-	1,50	5,97
	γ_M *)					

*) Recommended: $\gamma_{M,ser}$ = 1,0
γ_M = 1,1

RIB-ROOF Speed 500 sliding standing seam roofing aluminium

Cross section properties, characteristic resistance values and partial safety factor γ_M

RIB-ROOF Speed 500, b= 333

Annex B 3

Characteristic holding forces between profiled sheeting and standard clip, turned standard clip, flat clip border and perforated clip border made of steel t_N = 1,30 mm				
	Per clip	Based on the cover width b for RIB-ROOF Speed 500		
Sheet thickness t mm	$F_{Rk,B}$ kN	**b = 500 mm** $F_{Rk,B}$ kN/m	**b = 400 mm** $F_{Rk,B}$ kN/m	**b = 333 mm** $F_{Rk,B}$ kN/m
Intermediate support				
0,70	1,15	2,31	2,89	3,47
0,80	1,51	3,02	3,77	4,53
0,90	1,72	3,43	4,29	5,16
1,00	1,88	3,77	4,71	5,65
End support [1)]				
0,70	0,577	1,15	1,44	1,73
0,80	0,754	1,51	1,88	2,26
0,90	0,859	1,72	2,15	2,58
1,00	0,941	1,88	2,35	2,83
If the profiled clip borders are fastened at a distance of more than 3 hole spacing apart from the placed holes of the holding bracket (refer to clip border flat), greater deformations and plastification can arise. If this will result in constructional problems, the holding force in used condition has to be limited to the following values for each holding bracket: $F_{A,k}$ = 1,1 kN, $F_{B,k(500\ mm)}$ = 2,2 kN/m $F_{B,k(400\ mm)}$ = 2,75 kN/m $F_{B,k(333\ mm)}$ = 3,3 kN/m				

[1)] Profile overhang ü ≥ 6 cm in excess of the end of the clip.
Recommended partial safety factor: γ_M = 1,33

RIB-ROOF Speed 500 sliding standing seam roofing aluminium	Annex B 4
Characteristic holding forces between profiled sheeting and standard clip, turned standard clip, flat clip border and perforated clip border, characteristic resistance values and partial safety factor γ_M	

Characteristic holding forces between profiled sheeting and standard clip made from stainless steel, t = 1,20 mm, f_y = 290 N/mm²				
	Per clip	Based on the cover width b for RIB-ROOF Speed 500		
Sheet thickness t mm	$F_{Rk,B}$ kN	**b = 500 mm** $F_{Rk,B}$ kN/m	**b = 400 mm** $F_{Rk,B}$ kN/m	**b = 333 mm** $F_{Rk,B}$ kN/m
Intermediate support				
0,7	0,83	1,66	2,07	2,49
0,8	1,08	2,16	2,70	3,25
0,9	1,15	2,30	2,87	3,45
1,0	1,22	2,43	3,04	3,65
End support [1)]				
0,7	0,414	0,83	1,03	1,24
0,8	0,540	1,08	1,35	1,62
0,9	0,574	1,15	1,44	1,72
1,0	0,608	1,22	1,52	1,82

Characteristic holding forces between profiled sheeting and directional clip 200 and turned directional clip 200				
	Per clip	Based on the cover width b for RIB-ROOF Speed 500		
Sheet thickness t mm	$F_{Rk,B}$ kN	**b = 500 mm** $F_{Rk,B}$ kN/m	**b = 400 mm** $F_{Rk,B}$ kN/m	**b = 333 mm** $F_{Rk,B}$ kN/m
Intermediate support				
0,7	1,41	2,82	3,52	4,23
0,8	1,84	3,68	4,60	5,53
0,9	2,26	4,51	5,64	6,77
1,0	2,61	5,21	6,52	7,83
End support [1)]				
0,7	0,70	1,41	1,76	2,12
0,8	0,92	1,84	2,30	2,76
0,9	1,13	2,26	2,82	3,39
1,0	1,30	2,61	3,26	3,91

[1)] Profile overhang ü ≥ 6 cm in excess of the end of the clip.
Recommended partial safety factor: γ_M = 1,33

RIB-ROOF Speed 500 sliding standing seam roofing aluminium	Annex B 5
Characteristic holding forces between profiled sheeting and standard clip, made from stainless steel, directional clip 200 and turned directional clip characteristic resistance values and partial safety factor γ_M	

Characteristic holding forces between profiled sheeting and directional profiles or turned directional profiles

For directional profiles and turned directional profiles one may assume the load-bearing capacity of a directional clip 200 or turned directional clip 200 according to annex B 5 for every connecting point of a directional profile (or turned directional profile) with the substructure.
The drawing shows the assignment of the resistance as example for directional profiles and turned directional profiles with two connecting points (supports).

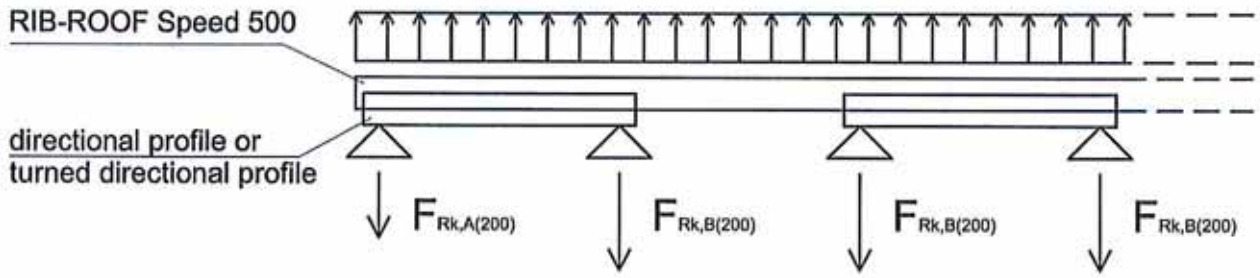

Recommended partial safety factor: $\gamma_M = 1{,}33$

RIB-ROOF Speed 500 sliding standing seam roofing aluminium	Annex B 6
Characteristic holding forces between profiled sheeting and directional profiles and turned directional profiles	

Walk-on stability after Assembly

Fully fixed profiled sheeting may be walked on without any load-dispersal measures up to the following spans:

Sheet thickness	RIB-ROOF Speed 500					
	Cover width = 500 mm		Cover width = 400 mm		Cover width = 333 mm	
	Single-span beam	Multi-span beam	Single-span beam	Multi-span beam	Single-span beam	Multi-span beam
t mm	L_{gr} m	L_{gr} m	L_{gr} m	L_{gr} m	L_{gr} m	L_{gr} m
0,70	2,45	3,06	2,34	2,92	2,22	2,78
0,80	3,20	4,00	3,05	3,81	2,90	3,63
0,90	3,20	4,00	3,05	3,81	2,90	3,63
1,00	3,20	4,00	3,05	3,81	2,90	3,63

RIB-ROOF Speed 500 sliding standing seam roofing aluminium

Characteristic resistance values
Walk-on stability

Annex B 7

Supplementary information for design, installation, execution and maintenance

The performance and serviceability of the construction product can be provided according the following:

C 1 General

The verification of the load-bearing capacity and serviceability is provided in each individual case according to EN 1990 and EN 1999-1-4 in consideration of the information in this ETA.
In general, it is verified that the design value of the effect of the action E_d does not exceed the design values of the related load-bearing capacity R_d e.g., $E_d \leq R_d$.

The design values of the load-bearing capacities are the result of dividing the characteristic values by the partial safety factor γ_M.

Following verifications shall be provided generally:

- Verification of profile sheeting
- Verification of the clips according to annexes A 3 to A 7
  – Pull out resistance of the clips in head of seam of profiled sheeting (holding forces)
  – Fastening of the clips to the substructure
- If required by national regulations verification of walkability (walk-on resistance) after assembly (where required) according to annex B 7 or the manufacturer's recommendations

If there is the possibility of the formation of a water pocket (Generally applies to roof slopes less than 2% and to unfavourable position concerning drainage engineering of the roof outlets.), this load case is verified with the following loads: permanent load and water load as a result of the total deflection of the profiled sheeting from the loads to be applied.

The profiled sheeting are supported in a single span configuration or continuously across several spans. The center-to-center distance of the clips is assumed as span. Continuous beams with spans of less than 1.0 m are verified with an effective span of at least 1.0 m.

The loads are static or quasi-static.

The verification of the ultimate limit state is performed by a structural engineer experienced in the field of lightweight metal construction.

The aluminium strip is protected against corrosion at normal weathering conditions of sea, country, city or industry surroundings by formation of a natural oxide layer. In cases of an increased corrosion risk, e.g. in the immediate vicinity of plants which emit larger amounts of aggressive substances (e.g. copper smelters), the performance of the profile sheets is given by a suitable plastic coating protection with a nominal thickness of 25 microns minimum. The suitability of the plastic coating shall be attested by evidence of corresponding bodies.

With respect to the corrosion protection the information given in Annex A 1 apply.

RIB-ROOF Speed 500 sliding standing seam roofing aluminium	Annex C 1
Supplementary information for design, installation, execution and maintenance	

C 2 Design loads (actions)

C 2.1 General

Unless otherwise stated EN 1990 shall apply.

C 2.2 Dead load of profiled sheeting

The dead loads of profiled sheeting according to annex A 2 are shown in annexes B 1 to B 5.

C 2.3 Point load, walk-on stability

The verification of the ultimate limit state for a point load action of 1 kN on the profiled sheeting shown in annex A 2 can be assumed as proofed if the provisions in this European Technical Assessment have been observed.

C 3 Verifications for action of loads acting normal to the installed profiled sheets

C 3.1 Calculation of stress

Unless otherwise stated EN 1999-1-4 shall apply. Fundamentally, the effects of actions acting normal to the installed profiled sheets will be calculated using the theory of elasticity.

C 3.2 Calculation of load bearing capacity on base of characteristic resistance values

EN 1999-1-4 and annexes B 1 to B 4 shall apply.

The verification of the interaction of moment and support reaction of the profiled sheeting at the intermediate support is given in deviation from equation (6.22), clause 6.1.11 of EN 1999-1-4 according to the interaction equation given in annexes B 1 to B 3.If $M°_{Rk,B}$ and $R°_{Rk,B}$ are not given in tables of annexes B 1 to B 3, verification of interaction is not necessary.

The characteristic values of profiled sheets shown in annex A 2 can be interpolated linearly in case of construction widths in between.

In terms of pull-out performance (holding force) between clips and head of seams annexes B 4 and B 5 applies.
The design values are the result of dividing the characteristic values by the partial safety factor γ_M.

For directional profiles and turned directional profiles one may assume the load-bearing capacity of a directional clip 200 or turned directional clip 200 according to annex B 5 for every connecting point of a directional profile (or turned directional profile) with the substructure, see Annex B 6.

The characteristic values of the resistances of connections between clips and substructure can be gathered from the corresponding ETAs or standards (e. g. EN 1995-1-1). The design values are the result of dividing the characteristic values by the partial safety factor γ_M.

C 3.3 Verification of deflections (serviceability limit state)

The characteristic values of moment of inertia of profiled sheeting according to annex A 2 are shown in annexes B 1 to B 3.

C 3.4 Forces acting in plane of the roof

A transmission of shear and direct forces acting in the plane of the roof due to a roof pitch by the profiled sheeting must not be considered by way of calculation without special requirements concerning the execution – e.g. formation of fixed points according to annex C 5. The forces from fixed points shall be further followed up in the substructure.

RIB-ROOF Speed 500 sliding standing seam roofing aluminium	Annex C 2
Supplementary information for design, installation, execution and maintenance	

C 3.5 Diaphragm action

A diaphragm action of the profiled sheeting for stiffening the total works or a shear or torsional stiffness for stabilizing the substructure against lateral torsional buckling will not be taken into account by way of calculation.

C 4 Information for execution

C 4.1 General

The profiled sheeting is connected with each other continuously forming a rainproof standing seam by clamping the lateral edge ribs of adjacent roof elements. The connection to the substructure is made by clips, not visible from above, clamped between the edge ribs, which are fastened to the substructure.

The profiled sheeting may only be installed by specialists of the manufacturing plant or by companies having received appropriate training and authorization by the manufacturer. The manufacturer or the person laying the profiled sheeting shall prepare implementation instructions for the laying of the elements to be handed over to the assemblers.

Damaged profiled sheeting including plastic deformations must not be installed.

After completion of a roof installation, all foreign objects shall be cleaned from the roof.

When using profiled sheeting of different sheet thicknesses in a roof, these shall be marked according to sheet thicknesses, in order to avoid mix-ups.

C 4.2 Profiled sheeting

Connecting

The profiled sheeting is connected to the substructure at each edge rib by clips. For fixing the profiled sheeting during thermal movement and for transmitting the in plane forces in case of sloped roofs or wall coverings, fixed points are provided according to annex C 5.

The individual elements are connected immediately after laying by clamping the lateral edge ribs. In doing so, attention shall be paid to a faultless connection to the clips. If the laying of the profiled sheeting is interrupted before completion of the full roof or wall extents, then the last laid profiled sheeting shall always be secured to provide adequate restraint against detachment from the clips due to wind loads.

An additional securing against sheet detachment from the clips is also required if the construction, during installation, is exposed to larger wind loads than at the final state.

Minimal roof slope

When using the profiled sheeting as the weathering outer skin of roofs, the minimum roof pitch for roofs without transverse joints or with welded transverse joints is 1.5° (2.6 %). The required minimum roof pitch increases to 2.9° (5 %) for roofs with sealed transverse joints and/or openings (e.g. domed roof-lights).

The required increase of the minimum roof slope for roof penetrations – e.g. for domed roof lights – may not be required, if completely welded flashings are used and the aluminium flashings are welded with the upper shell of the roof such that a completely watertight joint is achieved.

The requirement of the minimum roof slope does not apply to the ridge area, if the roof elements in the area with pitches ≤ 2.9° (5 %) are arranged continuously over the ridge.

Transverse joints

Transverse joints are permitted only if even under full load complete water run-off is still possible.

Transverse joints may only be installed directly over a support if the joint is at a fixed point. Otherwise the profiled sheeting is overlapped just above a support. For roof pitches of up to 17° (30 %) the mutual overlap of the profiled sheeting amounts to at least 20 cm, for larger roof pitches at least 15 cm.

Walkability (walk-on resistance)

During the installation, profiled sheeting shown in annex A 2 may only be walked on by placing planks using load-distributing measures.

After completion of the roof the profiled sheeting may be walked on for cleaning and maintenance work without load-distributing measures up to spans according to annex B 7.

Load-distributing measures, e. g. wooden planks of strength class C24 according to EN 14081-1 with a cross section of 4 x 24 cm and a length of > 3.0 m shall be applied if the effective span exceeds the aforementioned maximum values. The planks may be laid on the ribs in the direction of the span of the profiled sheeting or transverse to the direction of the span.

C 4.3 Clips

For the connection of the profiled sheeting to the substructure clips according to annexes A 3 to A 7 are used. The clips are attached directly to substructures made of steel, aluminium or timber.

Attachment of the clips to the substructure is carried out with the appropriate screws or rivets according to the ETAs or standards (e. g. EN 1995-1-1).

For connections of the profiled sheeting with a concrete substructure, sufficiently anchored continuous steel parts (e.g. HTU rails or 8 mm thick flat steels) or timber battens (minimum thickness 40 mm) with a width of at least the width of 60 mm are interposed.

C 4.4 End and intermediate support width

A minimum purlin width of 60 mm is required at end and intermediate supports. To ensure the load-bearing capacity at the end supports a profiled sheeting overhang of at least 60 mm is required.

C 4.5 Verge

Exposed edges in the direction of span of the profiled sheeting are stiffened by suitable edge stiffening (verge profile).

C 4.6 Indications to the person installing the profiled sheeting

- Packaging, transport and storage
  The manufacturer's instructions of Zambelli RIB-ROOF relating to Packaging, transport and storage shall be followed. In particular in order to avoid damage to the product a suitable weather protection shall be ensured.
- Use and maintenance
  Each delivery of Zambelli RIB-ROOF Speed 500 sliding standing seam system an installation instruction is enclosed.

  The components of the system must comply with the regulations and must be audited and maintained. After completion of the roof the profiled sheeting may be walked on for cleaning and maintenance work without load-distributing measures up to spans according to annex B 7. In case of other spans load- distributing measures are necessary (see clause C 4.2).

RIB-ROOF Speed 500 sliding standing seam roofing aluminium	Annex C 4
Supplementary information for design, installation, execution and maintenance	

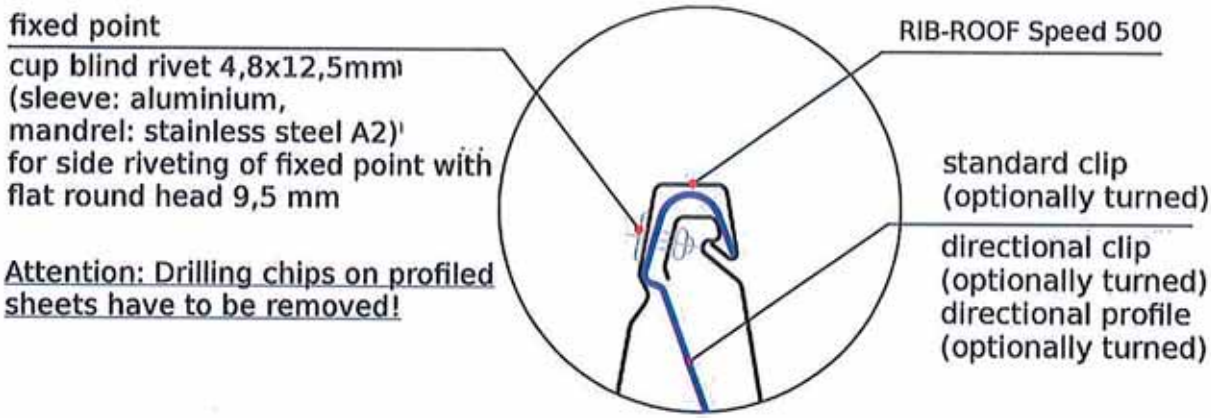

Fixed point

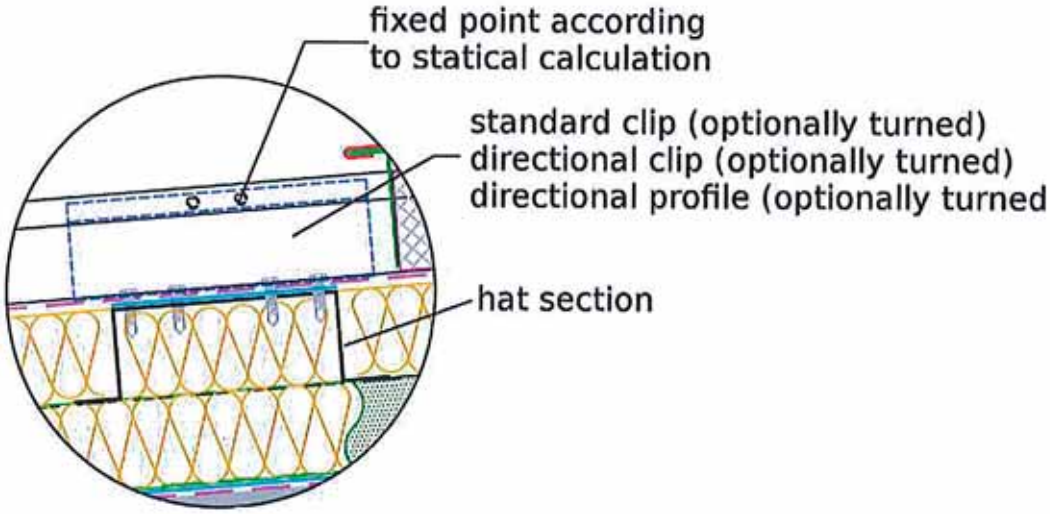

RIB-ROOF Speed 500 sliding standing seam roofing aluminium	Annex C 5
Supplementary information for design, installation, execution and maintenance Fixed point formation (exemplary for steel substructure)	

SIMPLY COVERING FUNCTIONS

Zambelli
RIB-ROOF GmbH & Co. KG
Hans-Sachs-Strasse 3 + 5
94569 Stephansposching
Germany

Telefon +49 9931 89590-0
Fax +49 9931 89590-49
E-mail rib-roof@zambelli.de

ICH MACH'S EINFACH.

02/2021