ASSA ABLOY

Solid Stainless Steel Lever Handles

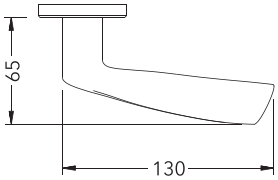

Model No.: AAL101

Description: Solid Lever on Rose
Dimensions: Length - 120mm
Spindle: 8mm x 8mm straight spindle standard
Round Rose: Ø54mm x 8mm

Finish:
Satin Stainless Steel
Polished Stainless Steel

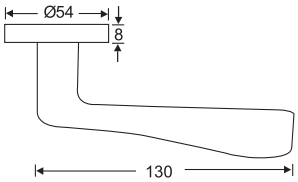

Model No.: AAL102

Description: Solid Lever on Rose
Dimensions: Length -130mm
Spindle: 8mm x 8mm straight spindle standard
Round Rose: Ø54mm x 8mm

Finish:
Satin Stainless Steel
Polished Stainless Steel

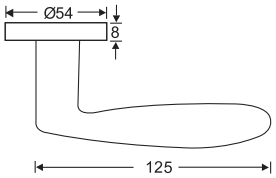

Model No.: AAL103

Description: Lever on Rose
Dimensions: Length - 125mm
Spindle: 8mm x 8mm straight spindle standard
Round Rose: Ø54mm x 8mm

Finish:
Satin Stainless Steel
Polished Stainless Steel

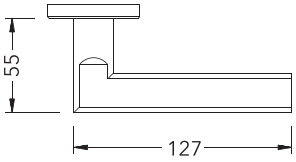

Model No.: AAL104

Description: Solid Lever on Rose
Dimensions: Length - 127mm
Spindle: 8mm x 8mm straight spindle standard
Round Rose: Ø54mm x 8mm

Finish:
Satin Stainless Steel
Polished Stainless Steel

ASSA ABLOY

Solid Stainless Steel Lever Handles

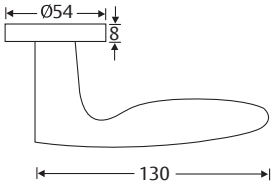

Model No.: AAL105

Description: Solid Lever on Rose
Dimensions: Length - 130mm
Spindle: 8mm x 8mm straight spindle standard
Round Rose: Ø54mm x 8mm

Finish:
Satin Stainless Steel
Polished Stainless Steel

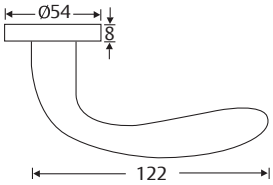

Model No.: AAL106

Description: Solid Lever on Rose
Dimensions: Length - 122mm
Spindle: 8mm x 8mm straight spindle standard
Round Rose: Ø54mm x 8mm

Finish:
Satin Stainless Steel
Polished Stainless Steel

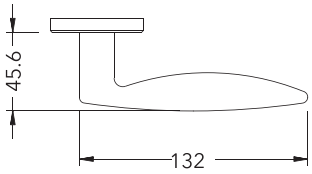

Model No.: AAL107

Description: Solid Lever on Rose
Dimensions: Length - 132mm
Spindle: 8mm x 8mm straight spindle standard
Round Rose: Ø54mm x 8mm

Finish:
Satin Stainless Steel
Polished Stainless Steel

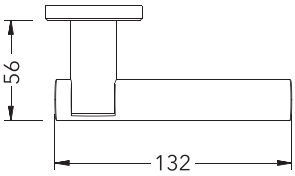

Model No.: AAL108

Description: Solid Lever on Rose
Dimensions: Length - 132mm
Spindle: 8mm x 8mm straight spindle standard
Round Rose: Ø54mm x 8mm

Finish:
Satin Stainless Steel
Polished Stainless Steel

ASSA ABLOY

Solid Stainless Steel Lever Handles

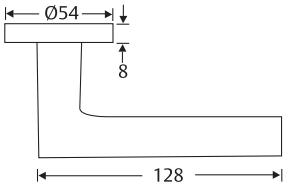

Model No.: AAL109

Description: Solid Lever on Rose
Dimensions: Length - 128mm
Spindle: 8mm x 8mm straight spindle standard
Round Rose: Ø54mm x 8mm

Finish:
Satin Stainless Steel
Polished Stainless Steel

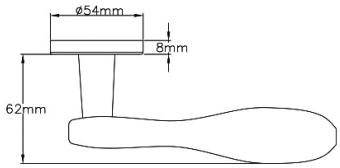

Model No.: AAL110

Description: Solid Lever on Rose
Dimensions: Length - 128mm
Spindle: 8mm x 8mm straight spindle standard
Round Rose: Ø54mm x 8mm

Finish:
Satin Stainless Steel
Polished Stainless Steel

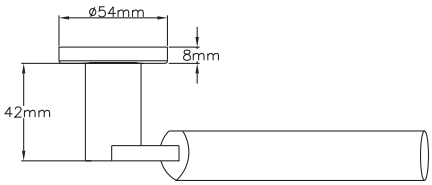

Model No.: AAL111

Description: Solid Lever on Rose
Dimensions: Length - 130mm
Spindle: 8mm x 8mm straight spindle standard
Round Rose: Ø54mm x 8mm

Finish:
Satin Stainless Steel
Polished Stainless Steel

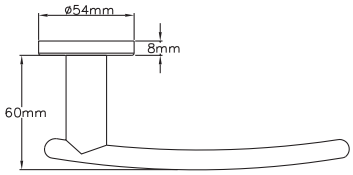

Model No.: AAL112

Description: Solid Lever on Rose
Dimensions: Length - 137mm
Spindle: 8mm x 8mm straight spindle standard
Round Rose: Ø54mm x 8mm

Finish:
Satin Stainless Steel
Polished Stainless Steel

ASSA ABLOY

Solid Stainless Steel Lever Handles

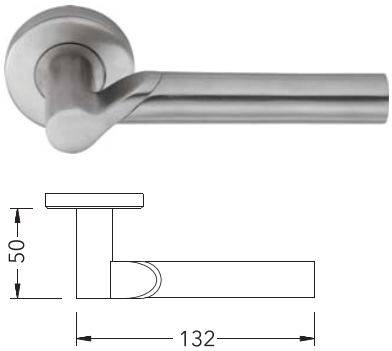

Model No.: AAL113

Description: Solid Lever on Rose
Dimensions: Length - 132mm
Spindle: 8mm x 8mm straight spindle standard
Round Rose: Ø54mm x 8mm

Finish:
Satin Stainless Steel
Polished Stainless Steel

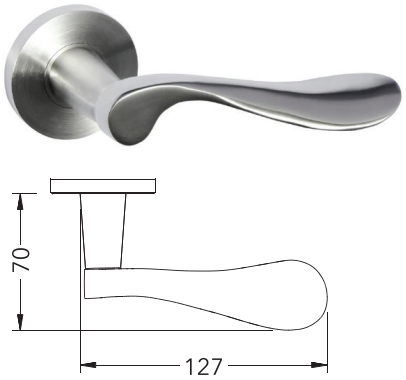

Model No.: AAL114

Description: Solid Lever on Rose
Dimensions: Length - 127mm
Spindle: 8mm x 8mm straight spindle standard
Round Rose: Ø54mm x 8mm

Finish:
Satin Stainless Steel
Polished Stainless Steel

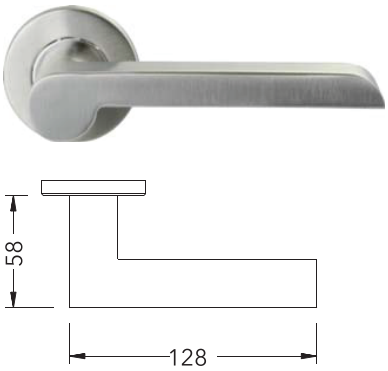

Model No.: AAL115

Description: Solid Lever on Rose
Dimensions: Length - 128mm
Spindle: 8mm x 8mm straight spindle standard
Round Rose: Ø54mm x 8mm

Finish:
Satin Stainless Steel
Polished Stainless Steel

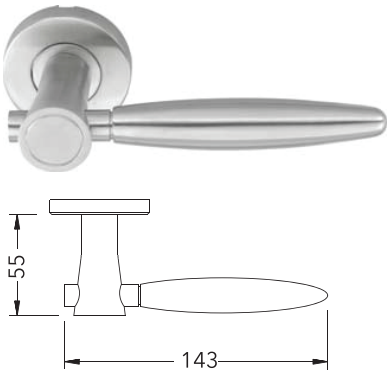

Model No.: AAL116

Description: Solid Lever on Rose
Dimensions: Length - 139mm
Spindle: 8mm x 8mm straight spindle standard
Round Rose: Ø54mm x 10mm

Finish:
Satin Stainless Steel
Polished Stainless Steel

ASSA ABLOY

Solid Stainless Steel Lever Handles

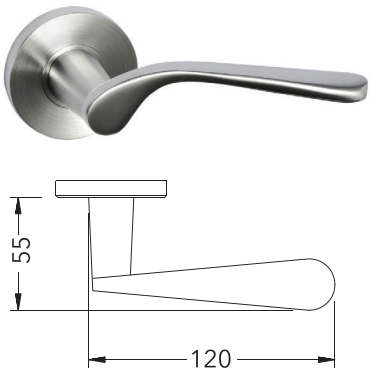

Model No.: AAL117

Description: Solid Lever on Rose
Dimensions: Length - 120mm
Spindle: 8mm x 8mm straight spindle standard
Round Rose: Ø54mm x 8mm

Finish:
Satin Stainless Steel
Polished Stainless Steel

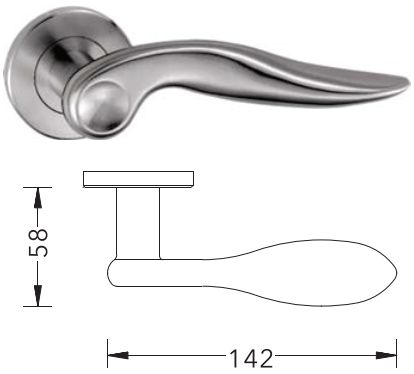

Model No.: AAL118

Description: Solid Lever on Rose
Dimensions: Length - 142mm
Spindle: 8mm x 8mm straight spindle standard
Round Rose: Ø54mm x 8mm

Finish:
Satin Stainless Steel
Polished Stainless Steel

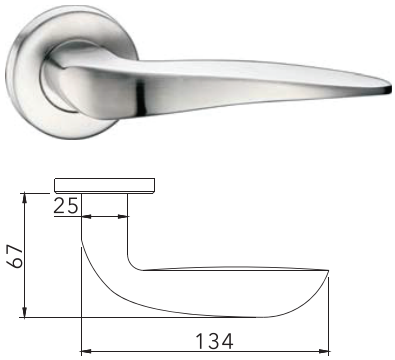

Model No.: AAL119

Description: Solid Lever on Rose
Dimensions: Length - 134mm
Spindle: 8mm x 8mm straight spindle standard
Round Rose: Ø54mm x 8mm

Finish:
Satin Stainless Steel
Polished Stainless Steel

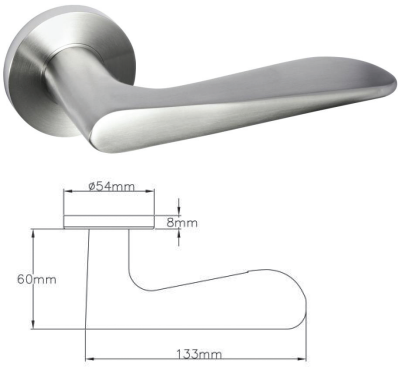

Model No.: AAL120

Description: Solid Lever on Rose
Dimensions: Length - 133mm
Spindle: 8mm x 8mm straight spindle standard
Round Rose: Ø54mm x 8mm

Finish:
Satin Stainless Steel
Polished Stainless Steel